Jun. 2011

SERVICE MANUAL ADDENDUM

IC-F61 IC-F61-L (ATEX versions)

CONTENTS

PARTS LIST 1
BOARD LAYOUTS 10
VOLTAGE DIAGRAM 13

[VERSION LIST]

Model	Version	Frequency range (MHz)	Channel spacing (kHz)
IC-F61	[EUR-88]	400–470	12.5/20.0/25.0
	[EUR-98]		
	[CHN-88]		12.5/25.0
IC-F61-L	[EXP-20]	350–400	

PARTS LIST

[FRONT UNIT]

REF NO.	PARTS NO.	DESCRIPTION	M.	H/V LOCATION
IC401	1140012871	S.IC HD6432264F02TFV(FX-2681A-1) [EUR-88]	T	23.0/28.0
	1140010191	S.IC HD64F2268TF20V(EMPTY) [EUR-98]		
	1140012871	S.IC HD6432264F02TFV(FX-2681A-1) [CHN-88]		
	1140012871	S.IC HD6432264F02TFV(FX-2681A-1) [EXP-20]		
IC403	1110005340	S.IC NJM12902V-TE1-#ZZZB	T	19.2/43.2
IC405	1110001811	S.IC TA7368FG(5ER)	T	25.9/53.3
IC406	1130011741	S.IC TC7W66FK(TE85LF)	T	7.8/41.6
IC407	1110005330	S.IC NJM12904V-TE1-#ZZZB	T	7.1/31.4
IC408	1110006260	S.IC BD5242G-TR	T	30.5/18.5
IC409	1130011581	S.IC 24LC64T-I/SN G <SEI> [EUR-88]	T	8.8/17.8
	1130012691	S.IC R1EX24256ASA00A [EUR-98]		
	1130011581	S.IC 24LC64T-I/SN G <SEI> [CHN-88]		
	1130011581	S.IC 24LC64T-I/SN G <SEI> [EXP-20]		
IC410	1130011760	S.IC CD4094BPWR	T	40.6/37.3
Q401	1520000450	S.TRA 2SB1132 T100 Q	T	35.1/44.8
Q402	1590001190	S.TRA XP6501-(TX).AB	T	34.2/40.7
Q403	1530002841	S.TRA 2SC4116-Y(TE85RF)	B	10.8/57.0
Q404	1560001330	S.FET RSR025N03	B	11.6/59.9
Q405	1560001330	S.FET RSR025N03	B	15.1/59.9
Q406	1590000430	S.TRA DTC144EUA T106	B	15.6/57.0
Q407	1590000720	S.TRA DTA144EUA T106	T	42.6/30.6
Q408	1590000430	S.TRA DTC144EUA T106	T	26.5/39.2
Q409	1590002370	S.TRA XP4111(TX)	T	39.8/30.8
Q411	1590001660	S.TRA XP4312(TX)	T	27.4/18.7
Q412	1590000720	S.TRA DTA144EUA T106	T	13.0/17.6
Q413	1560001330	S.FET RSR025N03	B	32.3/53.0
D401	1790001251	S.DIO MA2S1110GL [EUR-88]	T	15.9/17.2
	1790001251	S.DIO MA2S1110GL [EUR-98]		
	1790001251	S.DIO MA2S1110GL [CHN-88]		
	1750002020	S.DIO DA2S10100L [EXP-20]		
D402	1790001251	S.DIO MA2S1110GL [EUR-88]	T	17.8/17.4
	1790001251	S.DIO MA2S1110GL [EUR-98]		
	1790001251	S.DIO MA2S1110GL [CHN-88]		
	1750002020	S.DIO DA2S10100L [EXP-20]		
D403	1790001251	S.DIO MA2S1110GL [EUR-88]	T	13.1/15.7
	1790001251	S.DIO MA2S1110GL [EUR-98]		
	1790001251	S.DIO MA2S1110GL [CHN-88]		
	1750002020	S.DIO DA2S10100L [EXP-20]		
D404	1790001261	S.DIO MA2S077G0L	T	34.8/18.7
D405	1730002361	S.ZEN MAZ8062GML [EUR-98] only	T	18.6/15.1
D406	1790001251	S.DIO MA2S1110GL [EUR-88]	T	36.5/36.9
	1790001251	S.DIO MA2S1110GL [EUR-98]		
	1790001251	S.DIO MA2S1110GL [CHN-88]		
	1750002020	S.DIO DA2S10100L [EXP-20]		
X401	6050011720	S.XTA CR-764 SMD-49TB 19.6608 MHz <KDS>	T	42.1/18.8
R401	7030005050	S.RES ERJ2GEJ 103 X (10K)	T	9.6/43.2
R402	7030005060	S.RES ERJ2GEJ 333 X (33K)	T	11.6/51.8
R403	7030005120	S.RES ERJ2GEJ 102 X (1K)	T	16.0/18.4
R404	7030005120	S.RES ERJ2GEJ 102 X (1K)	T	19.0/19.6
R405	7030007340	S.RES ERJ2GEJ 153 X (15K)	T	6.0/36.6
R406	7030005210	S.RES ERJ2GEJ 822 X (8.2K)	T	6.0/37.6
R407	7030005230	S.RES ERJ2GEJ 334 X (330K)	T	6.5/26.3
R408	7030005090	S.RES ERJ2GEJ 104 X (100K)	T	6.0/35.6
R409	7030005090	S.RES ERJ2GEJ 104 X (100K)	T	16.0/19.4
R410	7030005090	S.RES ERJ2GEJ 104 X (100K)	T	9.7/38.5
R411	7030005090	S.RES ERJ2GEJ 104 X (100K)	T	11.3/24.3
R412	7030005090	S.RES ERJ2GEJ 104 X (100K)	T	28.0/14.2
R413	7030005600	S.RES ERJ2GEJ 273 X (27K)	T	26.0/14.3
R414	7030005600	S.RES ERJ2GEJ 273 X (27K)	T	33.9/14.3
R415	7030005100	S.RES ERJ2GEJ 154 X (150K)	T	37.9/23.0
R416	7030005100	S.RES ERJ2GEJ 154 X (150K)	T	31.3/21.0
R417	7030005170	S.RES ERJ2GEJ 474 X (470K)	T	16.0/14.9
R418	7030005170	S.RES ERJ2GEJ 474 X (470K)	T	5.1/15.0
R420	7030005600	S.RES ERJ2GEJ 273 X (27K)	T	28.8/37.7
R421	7030005090	S.RES ERJ2GEJ 104 X (100K)	T	30.1/38.1
R422	7030005090	S.RES ERJ2GEJ 104 X (100K)	T	30.1/37.1
R423	7030005090	S.RES ERJ2GEJ 104 X (100K)	T	31.7/37.1
R426	7030005230	S.RES ERJ2GEJ 334 X (330K)	T	14.7/37.7
R427	7030005240	S.RES ERJ2GEJ 473 X (47K)	T	16.0/39.9
R428	7030005240	S.RES ERJ2GEJ 473 X (47K)	T	16.0/38.9
R429	7030005040	S.RES ERJ2GEJ 472 X (4.7K)	T	13.7/38.1
R430	7030007350	S.RES ERJ2GEJ 393 X (39K)	T	12.7/40.6
R432	7030005720	S.RES ERJ2GEJ 563 X (56K)	T	13.7/40.6
R433	7030005090	S.RES ERJ2GEJ 104 X (100K)	T	11.7/40.6
R434	7030005000	S.RES ERJ2GEJ 471 X (470)	B	35.0/56.5
R435	7030007260	S.RES ERJ2GEJ 330 X (33)	T	22.6/56.2
R436	7030005530	S.RES ERJ2GEJ 100 X (10)	T	24.5/49.9
R437	7030005120	S.RES ERJ2GEJ 102 X (1K)	T	31.7/41.4
R438	7030007300	S.RES ERJ2GEJ 332 X (3.3K)	T	31.7/39.4
R439	7030009140	S.RES ERJ2GEJ 272 X (2.7K)	T	34.6/38.9
R440	7030005090	S.RES ERJ2GEJ 104 X (100K)	T	42.8/32.7
R441	7030005070	S.RES ERJ2GEJ 683 X (68K)	T	37.3/35.5
R442	7030005170	S.RES ERJ2GEJ 474 X (470K)	B	12.7/57.3
R443	7030005170	S.RES ERJ2GEJ 474 X (470K)	B	11.4/55.2
R444	7030005090	S.RES ERJ2GEJ 104 X (100K)	B	13.7/57.3

[FRONT UNIT]

REF NO.	PARTS NO.	DESCRIPTION	M.	H/V LOCATION
R445	7030004980	S.RES ERJ2GEJ 101 X (100)	B	32.3/55.2
R446	7030005090	S.RES ERJ2GEJ 104 X (100K)	B	30.1/52.1
R455	7030005000	S.RES ERJ2GEJ 471 X (470)	T	43.2/27.8
R456	7030004980	S.RES ERJ2GEJ 101 X (100)	T	43.2/28.8
R457	7030005000	S.RES ERJ2GEJ 471 X (470)	B	45.3/48.5
R458	7030005120	S.RES ERJ2GEJ 102 X (1K)	B	43.9/49.9
R461	7030005110	S.RES ERJ2GEJ 224 X (220K)	T	33.1/33.6
R462	7030005720	S.RES ERJ2GEJ 563 X (56K)	T	32.1/33.6
R463	7030005220	S.RES ERJ2GEJ 223 X (22K)	T	31.1/33.6
R464	7030005220	S.RES ERJ2GEJ 223 X (22K)	T	32.1/35.3
R465	7030005050	S.RES ERJ2GEJ 103 X (10K)	T	31.1/35.3
R466	7030005240	S.RES ERJ2GEJ 473 X (47K)	T	26.7/41.4
R467	7030005240	S.RES ERJ2GEJ 473 X (47K)	T	25.7/41.4
R468	7030005240	S.RES ERJ2GEJ 473 X (47K)	T	23.7/41.4
R469	7030005040	S.RES ERJ2GEJ 472 X (4.7K)	T	18.9/39.0
R470	7030005240	S.RES ERJ2GEJ 473 X (47K)	T	20.2/38.7
R471	7030005110	S.RES ERJ2GEJ 224 X (220K)	T	34.6/24.3
R472	7030005090	S.RES ERJ2GEJ 104 X (100K)	T	33.6/24.3
R473	7030005240	S.RES ERJ2GEJ 473 X (47K)	T	32.6/24.3
R474	7030005220	S.RES ERJ2GEJ 223 X (22K)	T	31.6/24.3
R475	7030005050	S.RES ERJ2GEJ 103 X (10K)	T	35.6/24.3
R476	7030005070	S.RES ERJ2GEJ 683 X (68K)	T	27.2/45.2
R477	7030005070	S.RES ERJ2GEJ 683 X (68K)	T	25.2/45.2
R478	7030005070	S.RES ERJ2GEJ 683 X (68K)	T	23.9/44.8
R479	7030005070	S.RES ERJ2GEJ 683 X (68K)	T	18.6/47.9
R480	7030005070	S.RES ERJ2GEJ 683 X (68K)	T	17.0/46.9
R482	7030005090	S.RES ERJ2GEJ 104 X (100K)	T	37.2/34.1
R483	7030005090	S.RES ERJ2GEJ 104 X (100K)	T	16.0/21.4
R484	7030005090	S.RES ERJ2GEJ 104 X (100K)	T	16.0/20.4
R485	7030005090	S.RES ERJ2GEJ 104 X (100K)	T	11.1/22.7
R486	7410001130	S.ARR EXB28V102JX	T	13.6/24.7
R487	7030005090	S.RES ERJ2GEJ 104 X (100K)	T	33.5/23.0
R488	7030005090	S.RES ERJ2GEJ 104 X (100K)	T	31.9/31.3
R489	7030005050	S.RES ERJ2GEJ 103 X (10K)	T	32.9/31.3
R490	7030005050	S.RES ERJ2GEJ 103 X (10K)	T	33.9/31.3
R491	7030005530	S.RES ERJ2GEJ 100 X (10)	T	37.3/17.6
R492	7030005160	S.RES ERJ2GEJ 105 X (1M)	T	37.3/18.6
R493	7030008010	S.RES ERJ2GEJ 123 X (12K)	T	35.9/18.8
R494	7030008010	S.RES ERJ2GEJ 123 X (12K)	T	33.6/18.4
R495	7030008010	S.RES ERJ2GEJ 123 X (12K)	T	36.9/20.8
R496	7030005050	S.RES ERJ2GEJ 103 X (10K)	T	8.0/23.0
R497	7030005050	S.RES ERJ2GEJ 103 X (10K)	T	11.3/25.3
R500	7030005090	S.RES ERJ2GEJ 104 X (100K)	T	28.8/20.6
R501	7030005090	S.RES ERJ2GEJ 104 X (100K)	T	29.3/16.0
R502	7030010080	S.RES ERJ2RHD 1003X (100K)	T	36.9/14.3
R503	7030010080	S.RES ERJ2RHD 1003X (100K)	T	38.9/14.3
R506	7030007300	S.RES ERJ2GEJ 332 X (3.3K)	T	8.8/25.5
R507	7030005600	S.RES ERJ2GEJ 273 X (27K)	T	7.8/25.5
R508	7030007290	S.RES ERJ2GEJ 222 X (2.2K)	T	5.4/22.0
R509	7030005090	S.RES ERJ2GEJ 104 X (100K)	T	25.2/18.0
R511	7030005720	S.RES ERJ2GEJ 563 X (56K)	T	7.8/35.6
R512	7030005090	S.RES ERJ2GEJ 104 X (100K)	T	5.2/25.8
R513	7030009290	S.RES ERJ2GEJ 562 X (5.6K)	T	5.4/39.9
R514	7030010040	S.RES ERJ2GEJ-JPW	T	8.5/48.9
R515	7520000270	S.POS PRG21BC4R7MM1RA	T	29.7/48.9
C401	4030017460	S.CER C1005 JB 1H 102K-T	T	10.6/51.8
C402	4030017460	S.CER C1005 JB 1H 102K-T	T	13.6/19.4
C403	4030017460	S.CER C1005 JB 1H 102K-T	T	18.0/19.6
C404	4030017460	S.CER C1005 JB 1H 102K-T	T	9.9/41.4
C405	4030017760	S.CER C1005 JB 1H 222K-T	T	7.8/36.6
C406	4030018110	S.CER C1005 JB 1H 272K-T	T	6.0/38.6
C407	4030017430	S.CER C1005 CH 1H 101J-T	T	6.5/25.3
C408	4030016930	S.CER C1005 JB 1A 104K-T	T	28.7/39.9
C409	4030016930	S.CER C1005 JB 1A 104K-T	T	27.5/37.3
C410	4030016930	S.CER C1005 JB 1A 104K-T	T	29.8/39.9
C411	4030016930	S.CER C1005 JB 1A 104K-T	T	31.7/38.1
C412	4030016930	S.CER C1005 JB 1A 104K-T	T	35.9/20.8
C413	4030016930	S.CER C1005 JB 1A 104K-T	T	34.9/20.8
C414	4030017640	S.CER C1005 CH 1H 150J-T	T	37.3/19.6
C415	4030016790	S.CER C1005 JB 1E 103K-T	T	30.3/21.0
C416	4030017630	S.CER C1005 CH 1H 120J-T	T	38.9/18.8
C417	4030017580	S.CER C1005 CH 1H 060C-T	T	38.9/20.8
C418	4030016930	S.CER C1005 JB 1A 104K-T	T	33.8/17.0
C419	4550006250	S.TAN TEESVA 1A 106M8R	T	23.7/16.4
C420	4030016930	S.CER C1005 JB 1A 104K-T	T	23.5/18.0
C421	4030016930	S.CER C1005 JB 1A 104K-T	T	16.0/37.9
C423	4030016930	S.CER C1005 JB 1A 104K-T	T	12.7/39.0
C424	4030017460	S.CER C1005 JB 1H 102K-T	T	30.4/54.8
C425	4030017730	S.CER C1005 JB 1H 471K-T	T	14.7/40.6
C426	4030017460	S.CER C1005 JB 1H 102K-T	B	35.5/55.2
C427	4550006080	S.TAN TEESVB2 1C 106M8R	T	40.4/45.9
C428	4030016930	S.CER C1005 JB 1A 104K-T	T	36.9/47.5
C429	4030017460	S.CER C1005 JB 1H 102K-T	T	33.7/48.3
C430	4030017460	S.CER C1005 JB 1H 102K-T	T	31.7/40.4
C431	4030016930	S.CER C1005 JB 1A 104K-T	T	34.3/37.9
C432	4030017460	S.CER C1005 JB 1H 102K-T	T	39.1/43.2
C433	4030017420	S.CER C1005 CH 1H 470J-T	B	25.2/53.3
C434	4550006250	S.TAN TEESVA 1A 106M8R	T	20.7/54.1
C435	4550007280	S.TAN F931A336MBABMA	T	17.8/54.8
C436	4030016950	S.CER C1005 JB 1A 473K-T	T	26.3/49.9
C437	4030017490	S.CER C1608 JB 1A 105K-T	B	33.8/56.0
C441	4030016960	S.CER C1005 JB 1E 183K-T	T	25.7/42.7
C442	4030016930	S.CER C1005 JB 1A 104K-T	T	24.7/41.4
C443	4030017750	S.CER C1005 JB 1H 122K-T	T	23.9/42.7
C444	4030016930	S.CER C1005 JB 1A 104K-T	T	20.2/39.7
C445	4030017460	S.CER C1005 JB 1H 102K-T	T	33.1/35.3

M.=Mounted side (T: Mounted on the Top side, B: Mounted on the Bottom side)
S.=Surface mount

[FRONT UNIT]

REF NO.	PARTS NO.	DESCRIPTION	M.	H/V LOCATION
C446	4030017460	S.CER C1005 JB 1H 102K-T	T	26.2/45.2
C447	4030017760	S.CER C1005 JB 1H 222K-T	T	23.9/45.8
C448	4030017690	S.CER C1005 CH 1H 121J-T	T	25.7/43.8
C449	4030017770	S.CER C1005 JB 1H 332K-T	T	18.6/46.9
C450	4030017420	S.CER C1005 CH 1H 470J-T	T	17.0/47.9
C461	4030017420	S.CER C1005 CH 1H 470J-T	T	38.9/23.0
C462	4030017420	S.CER C1005 CH 1H 470J-T	T	32.3/21.0
C463	4030017420	S.CER C1005 CH 1H 470J-T	T	16.0/16.0
C464	4030017420	S.CER C1005 CH 1H 470J-T	T	4.1/15.0
C465	4030017420	S.CER C1005 CH 1H 470J-T	T	27.0/14.3
C466	4030017420	S.CER C1005 CH 1H 470J-T	T	34.9/14.3
C467	4030017420	S.CER C1005 CH 1H 470J-T	T	29.3/14.7
C468	4030017420	S.CER C1005 CH 1H 470J-T	T	35.9/14.3
C473	4030016790	S.CER C1005 JB 1E 103K-T	T	37.9/14.3
C474	4030017490	S.CER C1608 JB 1A 105K-T	T	5.8/23.2
C475	4030017460	S.CER C1005 JB 1H 102K-T	T	8.9/55.3
C476	4030017460	S.CER C1005 JB 1H 102K-T	T	10.1/47.6
C477	4030017420	S.CER C1005 CH 1H 470J-T	T	12.7/36.4
C478	4030017420	S.CER C1005 CH 1H 470J-T	T	13.7/36.4
C479	4030017460	S.CER C1005 JB 1H 102K-T	T	19.2/16.5
C481	4030017460	S.CER C1005 JB 1H 102K-T	T	4.4/35.7
C482	4030017460	S.CER C1005 JB 1H 102K-T	T	11.5/37.7
C483	4030017460	S.CER C1005 JB 1H 102K-T	T	38.1/43.4
C484	4030017460	S.CER C1005 JB 1H 102K-T	B	14.7/55.2
C485	4030017460	S.CER C1005 JB 1H 102K-T	B	7.3/58.0
C486	4030017460	S.CER C1005 JB 1H 102K-T	T	10.1/56.5
C487	4030017460	S.CER C1005 JB 1H 102K-T	T	34.3/36.9
C488	4030017460	S.CER C1005 JB 1H 102K-T	T	23.9/43.7
C489	4030017460	S.CER C1005 JB 1H 102K-T	T	8.5/27.1
C490	4030017460	S.CER C1005 JB 1H 102K-T	T	41.2/28.6
C491	4030017460	S.CER C1005 JB 1H 102K-T	T	37.3/38.8
C492	4030017460	S.CER C1005 JB 1H 102K-T	T	8.0/22.0
C493	4030016930	S.CER C1005 JB 1A 104K-T	T	16.9/34.7
C494	4030017460	S.CER C1005 JB 1H 102K-T	T	39.7/67.3
C495	4030017460	S.CER C1005 JB 1H 102K-T	T	9.7/39.5
C496	4550007280	S.TAN F931A336MBABMA	T	14.5/54.8
C497	4030018390	S.CER C1005 JB 1A 563K-T	T	6.0/41.6
C498	4030017430	S.CER C1005 CH 1H 101J-T	T	7.8/37.6
C499	4030017420	S.CER C1005 CH 1H 470J-T	T	17.6/39.7
C500	4030016930	S.CER C1005 JB 1A 104K-T	B	4.1/39.0
C501	4030017730	S.CER C1005 JB 1H 471K-T	T	32.9/14.3
J401	6510023521	S.CON 54104-3696(3692)	T	27.8/6.8
J402	6510023831	S.CON (G)SM04B-SRSS-TB(LF)(SN)	T	34.9/52.5
J403	6510026581	CON CC1-B717-10-1 1K		
DS401	5030002731	LCD L3-0048TAY-6 <TES> [EUR-88]		
	5030002730	LCD L3-0048TAY-5 <TES> [EUR-98]		
	5030002731	LCD L3-0048TAY-6 <TES> [CHN-88]		
	5030002731	LCD L3-0048TAY-6 <TES> [EXP-20]		
DS402	5040002420	S.LED SML-310MT T86	B	13.5/16.1
DS403	5040002420	S.LED SML-310MT T86	B	32.7/15.3
DS404	5040002961	S.LED SML-A12MT T86J	B	6.4/38.0
DS405	5040002961	S.LED SML-A12MT T86J	B	42.6/38.0
DS406	5040002670	S.LED CL-165HR/YG	B	45.3/50.2
MC401	7700002730	MIC AMB-622-462C33		
S401	2260002840	SWI SKHLLFA010		
SP401	2510001092	SPE 036D0801B <FG>		
W401	8900011882	CAB OPC-1210A-1(P0.5N36L70)<TJM>		
W402	7030012290	JUM RDS2T0R0		
W403	7030012290	JUM RDS2T0R0		
EP402	8930061530	LCD SRCN-2681-SP-N-W (SHJ)		

[VR UNIT]

REF NO.	PARTS NO.	DESCRIPTION	M.	H/V LOCATION
R601	7210003130	VAR TP76N97N-13F-10KA-2497		
W601	8900012340	CAB OPC-1260		

M.=Mounted side (T: Mounted on the Top side, B: Mounted on the Bottom side)
S.=Surface mount

[CONNECTOR UNIT]

REF NO.	PARTS NO.	DESCRIPTION	M.	H/V LOCATION
D701	1790001810	S.VAR AVR-M1005C080MTABB	B	8.0/2.4
D702	1790001810	S.VAR AVR-M1005C080MTABB	B	8.0/3.4
D703	1790001810	S.VAR AVR-M1005C080MTABB	B	8.0/4.4
D704	1790001810	S.VAR AVR-M1005C080MTABB	T	9.6/6.1
D705	1790001810	S.VAR AVR-M1005C080MTABB	B	9.7/18.9
R701	7410001130	S.ARR EXB28V102JX	T	8.0/4.8
C701	4030017460	S.CER C1005 JB 1H 102K-T	B	9.7/9.4
C702	4030017460	S.CER C1005 JB 1H 102K-T	B	9.7/12.2
C703	4030017460	S.CER C1005 JB 1H 102K-T	B	9.7/15.3
C704	4030017460	S.CER C1005 JB 1H 102K-T	B	7.9/19.7
EP701	6910012350	S.BEA MMZ1608Y 102BT	B	8.2/8.6
EP702	6910012350	S.BEA MMZ1608Y 102BT	B	8.2/11.6
EP703	6910012350	S.BEA MMZ1608Y 102BT	B	8.2/14.6
EP704	6910012350	S.BEA MMZ1608Y 102BT	B	8.5/17.2
EP705	6910012350	S.BEA MMZ1608Y 102BT	B	9.8/17.2

[MAIN UNIT] (For IC-F61)

REF NO.	PARTS NO.	DESCRIPTION	M.	H/V LOCATION
IC1	1110003201	S.IC TA31136FNG(EL)	B	13.6/8.1
IC2	1130008561	S.IC TC75S51F(TE85LF)	T	52.3/17.1
IC4	1140005991	S.IC MB15A02PFV1-G-BND-ERE1	B	28.7/24.1
IC5	1110002751	S.IC TA75S01F(TE85RF)	T	30.1/7.3
IC6	1190000350	S.IC M62363FP-650C	T	19.7/8.9
IC7	1190001860	S.IC EW-460-FT	B	50.7/39.9
IC9	1110005350	S.IC NJM2870F05-TE1-#FZZB	T	73.3/28.0
IC10	1110006221	S.IC AK2346P-E2/P	T	18.9/19.6
IC11	1130006221	S.IC TC4W53FU(TE12LF)	T	25.2/25.0
IC12	1130011760	S.IC CD4094BPWR	T	16.9/32.2
IC13	1130011770	S.IC CD4066BPWR	T	22.7/32.2
IC14	1110004990	S.IC FX214LG/TR	B	9.8/32.5
IC15	1130007991	S.IC TC3W03FU(TE12LF)	B	22.5/33.4
Q1	1560000841	S.FET 2SK1829(TE85RF)	T	46.4/10.8
Q2	1580000731	S.FET 3SK293(TE85LF)	T	47.3/8.2
Q3	1580000760	S.FET 3SK299-T1 U73	B	42.0/9.3
Q4	1530002601	S.TRA 2SC4215-O(TE85RF)	B	21.3/4.5
Q5	1530004180	S.TRA 2SC3356-T1B YS (R25)	B	53.5/30.6
Q7	1560001232	S.FET RD07MVS2-T112	T	59.9/21.9
Q8	1560001241	S.FET RD01MUS1-T113	T	60.2/28.0
Q9	1530003311	S.TRA 2SC5107-O(TE85RF)	B	53.2/24.4
Q10	1530003311	S.TRA 2SC5107-O(TE85RF)	B	48.0/23.2
Q11	1530003311	S.TRA 2SC5107-O(TE85RF)	B	46.1/26.6
Q12	1530003311	S.TRA 2SC5107-O(TE85RF)	B	48.0/31.9
Q13	1530002920	S.TRA 2SC4226-T1 R25	B	42.4/29.1
Q14	1530002920	S.TRA 2SC4226-T1 R25	B	43.0/24.3
Q15	1590001400	S.TRA XP1214(TX)	T	47.5/27.2
Q16	1590000430	S.TRA DTC144EUA T106	T	47.2/29.9
Q17	1530002851	S.TRA 2SC4116-BL(TE85RF)	B	46.4/37.8
Q18	1560000541	S.FET 2SK880-Y(T5RICOMF)	T	34.2/21.6
Q21	1510000920	S.TRA 2SA1577 T106 Q	B	53.0/36.5
Q22	1510000920	S.TRA 2SA1577 T106 Q	B	34.5/37.9
Q23	1520000450	S.TRA 2SB1132 T100 Q	B	71.8/25.4
Q24	1590001190	S.TRA XP6501-(TX).AB	B	72.0/29.2
Q25	1590000720	S.TRA DTA144EUA T106	B	68.8/31.6
Q26	1590003321	S.FET TPC6103(TE85LF)	T	72.3/24.4
Q27	1590000720	S.TRA DTA144EUA T106	B	19.5/34.5
Q29	1590000430	S.TRA DTC144EUA T106	B	54.7/39.7
Q34	1530002851	S.TRA 2SC4116-BL(TE85RF)	B	25.6/17.8
Q35	1590001650	S.TRA XP4601(TX)	T	34.5/5.6
D1	1790001670	S.DIO RB706F-40T106	T	57.3/10.4
D2	1750000581	S.DIO 1SV307(TPH3F)	B	59.9/9.1
D3	1750000711	S.VAR HVC350BTRF-E	T	60.2/3.6
D4	1750000711	S.VAR HVC350BTRF-E	T	60.2/4.9
D5	1790001261	S.DIO MA2S077G0L	B	57.1/4.8
D6	1790001241	S.DIO MA2S7280GL	T	60.7/7.2
D7	1750000711	S.VAR HVC350BTRF-E	T	50.0/3.6
D8	1750000711	S.VAR HVC350BTRF-E	T	50.0/4.9
D9	1750000711	S.VAR HVC350BTRF-E	T	44.4/4.6
D10	1750000711	S.VAR HVC350BTRF-E	T	41.2/4.6
D12	1790001251	S.DIO MA2S1110GL	B	45.9/40.0
D14	1790001261	S.DIO MA2S077G0L	B	52.5/22.0
D15	1790001261	S.DIO MA2S077G0L	B	51.4/19.8
D16	1750000711	S.VAR HVC350BTRF-E	B	37.1/32.8
D17	1750000711	S.VAR HVC350BTRF-E	B	37.1/20.6
D18	1720000570	S.VAR MA368(TX)	B	36.6/25.0
D21	1750000711	S.VAR HVC350BTRF-E	B	39.4/25.6
D22	1750000711	S.VAR HVC350BTRF-E	B	38.9/28.9
D25	1790001251	S.DIO MA2S1110GL	T	42.8/9.0
D37	1790001251	S.DIO MA2S1110GL	B	31.5/30.1
D38	1790001251	S.DIO MA2S1110GL	T	52.5/14.8
D39	1790001670	S.DIO RB706F-40T106	T	63.9/10.4
FI1	2030000150	S.MON DSF753SB 46.350 MHz (FL-335)	B	31.7/5.8
FI2	2020002410	CER LTM450FW <JJE>		
FI3	2040001440	S.LC NFE31PT152Z1E9L (NFM60R20T152)	B	71.8/21.2
X1	6070000300	S.DIS JTBM450CX24 <JJE>	T	11.5/9.1
X2	6050011940	S.XTA CR-783 TTS14VSB-A6 15.3 MHz	B	27.8/33.6
X3	6050011560	S.XTA CR-746 SMD-49TA 4.000 MHz <KDS>	B	22.8/39.7
X4	6050011730	S.XTA CR-765 SMD-49TA 3.6864 MHz <KDS>	B	15.3/21.4
L1	6200012490	S.COI 0.30-0.9-6TR 13.6N <COMO>	B	65.6/6.1
L2	6200013010	S.COI 0.30-0.9-5TL 10.3N <COMO>	B	61.9/5.5
L3	6200012610	S.COI 0.40-0.9-2TL 2.8N <COMO>	B	62.2/11.2
L4	6200012610	S.COI 0.40-0.9-2TL 2.8N <COMO>	B	67.4/16.2
L5	6200010850	S.COI LQW18AN22NG00D (LQW1608A22NG00)	B	58.0/6.8
L7	6200007700	S.COI LQW2BHN22NJ03L	T	57.0/6.6
L8	6200007700	S.COI LQW2BHN22NJ03L	T	53.4/6.6
L9	6200007680	S.COI LQW2BHN12NJ03L	B	46.9/7.2
L11	6200007230	S.COI LQW2BHN15NJ03L	B	41.4/5.3
L12	6200005721	S.COI ELJRE 33NGFA	B	44.0/10.8
L13	6200003350	S.COI ELJNC R27K-F	B	38.8/11.5
L15	6200002851	S.COI NLV25T-R82J	B	56.9/9.8
L17	6200013010	S.COI 0.30-0.9-5TL 10.3N <COMO>	B	68.2/21.4
L19	6200005671	S.COI ELJRE 12NGFA	B	52.1/33.3
L20	6200005691	S.COI ELJRE 18NGFA	B	53.1/27.4
L21	6200005721	S.COI ELJRE 33NGFA	B	46.2/21.3
L22	6200005701	S.COI ELJRE 22NGFA	B	46.9/28.5
L23	6200002790	S.COI ELJFC R82M-F	T	43.6/23.3
L25	6200013581	S.COI 0.30-0.9-4TR 8.6J <COMO>	B	37.8/31.1
L26	6200014240	S.COI 0.30-0.9-3TR 5.8J <COMO>	B	37.8/22.3
L27	6200004951	S.COI NLV25T-1R8J	T	37.5/31.1
L28	6200002940	S.COI ELJFC 1R2K-F	T	38.3/22.6

M.=Mounted side (T: Mounted on the Top side, B: Mounted on the Bottom side)
S.=Surface mount

[MAIN UNIT] (For IC-F61)

REF NO.	PARTS NO.	DESCRIPTION	M.	H/V LOCATION
L29	6200004660	S.COI MLF1608A 1R8K-T	T	27.6/30.0
L30	6200007720	S.COI LQW2BHN33NJ03L	T	62.4/7.0
L32	6200005691	S.COI ELJRE 18NGFA	T	39.0/34.1
L33	6200004480	S.COI MLF1608D R82K-T	B	25.8/15.7
L35	6200003540	S.COI MLF1608D R22K-T	B	27.5/18.0
L38	6200005711	S.COI ELJRE 27NGFA	B	47.4/12.0
L40	6200002851	S.COI NLV25T-R82J	T	43.9/28.1
L41	6200005721	S.COI ELJRE 33NGFA	B	46.1/32.0
L42	6200004951	S.COI NLV25T-1R8J	T	40.0/30.3
L43	6200002940	S.COI ELJFC 1R2K-F	T	39.3/26.1
L44	6200012940	S.COI 0.30-0.9-2TR 2.5N <COMO>	B	64.3/12.3
L45	6200012490	S.COI 0.30-0.9-6TR 13.6N <COMO>	B	68.3/8.1
R1	7030003490	S.RES ERJ3GEYJ 272 V (2.7K)	B	59.7/11.4
R2	7030005120	S.RES ERJ2GEJ 102 X (1K)	T	59.1/10.0
R3	7030004970	S.RES ERJ2GEJ 470 X (47)	T	52.0/19.8
R4	7030005050	S.RES ERJ2GEJ 103 X (10K)	T	55.5/10.0
R5	7030005050	S.RES ERJ2GEJ 103 X (10K)	T	54.5/14.8
R6	7030005090	S.RES ERJ2GEJ 104 X (100K)	T	47.8/16.0
R7	7030005310	S.RES ERJ2GEJ 124 X (120K)	T	49.1/16.5
R8	7030005170	S.RES ERJ2GEJ 474 X (470K)	T	54.5/16.6
R9	7030008280	S.RES ERJ2GEJ 271 X (270)	T	53.6/19.8
R10	7030005120	S.RES ERJ2GEJ 102 X (1K)	T	54.1/21.7
R11	7030005090	S.RES ERJ2GEJ 104 X (100K)	T	57.1/3.5
R12	7030005530	S.RES ERJ2GEJ 100 X (10)	T	48.3/10.3
R13	7030005090	S.RES ERJ2GEJ 104 X (100K)	T	53.3/3.5
R14	7030005050	S.RES ERJ2GEJ 103 X (10K)	T	54.7/4.0
R15	7030005240	S.RES ERJ2GEJ 473 X (47K)	T	48.3/5.9
R16	7030004980	S.RES ERJ2GEJ 101 X (100)	T	46.9/4.4
R17	7030004970	S.RES ERJ2GEJ 470 X (47)	B	48.4/7.2
R18	7030005050	S.RES ERJ2GEJ 103 X (10K)	T	50.1/8.5
R19	7030005080	S.RES ERJ2GEJ 823 X (82K)	T	49.1/7.7
R20	7030005120	S.RES ERJ2GEJ 102 X (1K)	B	45.4/7.2
R21	7030005110	S.RES ERJ2GEJ 224 X (220K)	T	43.2/5.8
R22	7030005050	S.RES ERJ2GEJ 103 X (10K)	T	38.7/5.3
R23	7030005110	S.RES ERJ2GEJ 224 X (220K)	T	40.0/5.8
R25	7030005040	S.RES ERJ2GEJ 472 X (4.7K)	B	43.9/7.2
R29	7030007270	S.RES ERJ2GEJ 151 X (150)	B	41.5/13.1
R30	7030005120	S.RES ERJ2GEJ 102 X (1K)	B	39.5/8.7
R31	7030004980	S.RES ERJ2GEJ 101 X (100)	B	36.7/11.5
R32	7030004980	S.RES ERJ2GEJ 101 X (100)	B	37.7/7.7
R33	7030007270	S.RES ERJ2GEJ 151 X (150)	B	25.4/4.1
R34	7030005110	S.RES ERJ2GEJ 224 X (220K)	B	23.1/5.9
R35	7030004980	S.RES ERJ2GEJ 101 X (100)	B	22.3/7.9
R36	7030005030	S.RES ERJ2GEJ 152 X (1.5K)	T	13.5/13.6
R37	7030005000	S.RES ERJ2GEJ 471 X (470)	B	21.8/6.4
R38	7030005090	S.RES ERJ2GEJ 104 X (100K)	B	20.2/7.6
R39	7030004970	S.RES ERJ2GEJ 470 X (47)	B	7.7/6.8
R40	7030007270	S.RES ERJ2GEJ 151 X (150)	B	8.7/6.8
R43	7030004970	S.RES ERJ2GEJ 470 X (47)	B	17.4/11.1
R44	7030005090	S.RES ERJ2GEJ 104 X (100K)	B	11.6/11.4
R45	7030005070	S.RES ERJ2GEJ 683 X (68K)	B	14.4/13.2
R46	7030005000	S.RES ERJ2GEJ 471 X (470)	B	13.1/12.7
R50	7030004980	S.RES ERJ2GEJ 101 X (100)	B	49.6/14.3
R51	7030003670	S.RES ERJ3GEYJ 823 V (82K)	B	69.9/10.4
R52	7030004980	S.RES ERJ2GEJ 101 X (100)	B	54.2/9.4
R53	7030005530	S.RES ERJ2GEJ 100 X (10)	T	55.6/24.2
R54	7030005060	S.RES ERJ2GEJ 333 X (33K)	T	55.1/25.5
R55	7030005040	S.RES ERJ2GEJ 472 X (4.7K)	T	53.6/26.0
R57	7030007270	S.RES ERJ2GEJ 151 X (150)	T	55.8/30.0
R58	7030005060	S.RES ERJ2GEJ 333 X (33K)	T	53.1/31.4
R59	7030005040	S.RES ERJ2GEJ 472 X (4.7K)	T	52.3/26.5
R61	7030004970	S.RES ERJ2GEJ 470 X (47)	B	51.2/30.6
R62	7030005220	S.RES ERJ2GEJ 223 X (22K)	B	54.8/32.6
R65	7030004980	S.RES ERJ2GEJ 101 X (100)	B	51.2/28.1
R66	7030007340	S.RES ERJ2GEJ 153 X (15K)	B	51.2/24.9
R67	7030004980	S.RES ERJ2GEJ 101 X (100)	B	53.7/22.3
R68	7030005050	S.RES ERJ2GEJ 103 X (10K)	B	53.7/20.5
R69	7030005040	S.RES ERJ2GEJ 472 X (4.7K)	T	49.7/20.3
R70	7030005530	S.RES ERJ2GEJ 100 X (10)	B	45.9/24.5
R71	7030005240	S.RES ERJ2GEJ 473 X (47K)	B	45.9/23.5
R73	7030004980	S.RES ERJ2GEJ 101 X (100)	B	44.5/30.0
R74	7030005090	S.RES ERJ2GEJ 104 X (100K)	B	44.2/28.7
R75	7030005100	S.RES ERJ2GEJ 154 X (150K)	B	48.1/30.0
R76	7030004980	S.RES ERJ2GEJ 101 X (100)	B	45.0/31.3
R77	7030005050	S.RES ERJ2GEJ 103 X (10K)	T	48.1/32.0
R78	7030008370	S.RES ERJ2GEJ 561 X (560)	T	46.3/23.8
R79	7030006020	S.RES RR0510P-682-D (6.8K)	B	40.8/22.9
R80	7030005010	S.RES ERJ2GEJ 681 X (680)	T	45.5/26.4
R81	7030009320	S.RES ERJ2GEJ 4R7 X (4.7)	B	43.4/21.9
R83	7030006020	S.RES RR0510P-682-D (6.8K)	B	40.6/30.5
R84	7030006020	S.RES RR0510P-682-D (6.8K)	B	42.2/32.3
R85	7030006020	S.RES RR0510P-682-D (6.8K)	B	42.4/21.1
R86	7030005530	S.RES ERJ2GEJ 100 X (10)	B	38.0/25.1
R87	7030005110	S.RES ERJ2GEJ 224 X (220K)	T	37.0/24.9
R89	7030005050	S.RES ERJ2GEJ 103 X (10K)	T	33.9/23.5
R90	7030005170	S.RES ERJ2GEJ 474 X (470K)	T	32.5/17.2
R92	7030005310	S.RES ERJ2GEJ 124 X (120K)	T	33.0/18.5
R93	7030005120	S.RES ERJ2GEJ 102 X (1K)	B	31.0/28.4
R94	7030005100	S.RES ERJ2GEJ 154 X (150K)	B	30.3/30.5
R95	7030005120	S.RES ERJ2GEJ 102 X (1K)	T	36.0/24.9
R96	7030008410	S.RES ERJ2GEJ 392 X (3.9K)	T	32.6/23.6
R97	7030005120	S.RES ERJ2GEJ 102 X (1K)	T	31.9/24.9
R98	7030007290	S.RES ERJ2GEJ 222 X (2.2K)	B	44.6/38.2
R100	7030005040	S.RES ERJ2GEJ 472 X (4.7K)	B	32.7/21.6
R101	7030005000	S.RES ERJ2GEJ 471 X (470)	T	32.1/22.3
R103	7030005240	S.RES ERJ2GEJ 473 X (47K)	T	28.8/14.5
R104	7030005230	S.RES ERJ2GEJ 334 X (330K)	T	26.0/12.5
R105	7030005170	S.RES ERJ2GEJ 474 X (470K)	T	29.3/12.1
R106	7030008290	S.RES ERJ2GEJ 183 X (18K)	T	27.2/16.3
R107	7030005090	S.RES ERJ2GEJ 104 X (100K)	T	26.7/15.0
R108	7030005050	S.RES ERJ2GEJ 103 X (10K)	B	26.7/30.0
R109	7030005580	S.RES ERJ2GEJ 560 X (56)	T	37.2/33.8
R111	7030005090	S.RES ERJ2GEJ 104 X (100K)	T	36.4/20.4

[MAIN UNIT] (For IC-F61)

REF NO.	PARTS NO.	DESCRIPTION	M.	H/V LOCATION
R113	7030006610	S.RES ERJ2GEJ 394 X (390K)	T	39.3/28.2
R114	7030005100	S.RES ERJ2GEJ 154 X (150K)	B	38.2/26.9
R115	7030007570	S.RES ERJ2GEJ 122 X (1.2K)	B	27.0/19.8
R116	7030007060	S.RES ERJ2GEJ 684X (680K)	B	25.2/19.8
R117	7030005040	S.RES ERJ2GEJ 472 X (4.7K)	B	31.7/19.3
R118	7030005040	S.RES ERJ2GEJ 472 X (4.7K)	B	30.7/19.3
R119	7030005050	S.RES ERJ2GEJ 103 X (10K)	B	18.9/12.6
R120	7030005000	S.RES ERJ2GEJ 471 X (470)	T	24.7/13.6
R121	7030008010	S.RES ERJ2GEJ 123 X (12K)	T	25.8/17.5
R122	7030006610	S.RES ERJ2GEJ 394 X (390K)	T	25.3/18.8
R123	7030005080	S.RES ERJ2GEJ 823 X (82K)	T	13.0/16.7
R124	7030005060	S.RES ERJ2GEJ 333 X (33K)	T	13.5/15.4
R125	7030005240	S.RES ERJ2GEJ 473 X (47K)	T	16.1/14.8
R126	7030005160	S.RES ERJ2GEJ 105 X (1M)	T	14.0/18.5
R127	7030005060	S.RES ERJ2GEJ 333 X (33K)	T	20.8/24.8
R128	7030005060	S.RES ERJ2GEJ 333 X (33K)	T	21.8/24.8
R129	7030005840	S.RES RR0510P-473-D (47K)	B	22.0/13.9
R130	7030006000	S.RES RR0510P-222-D (2.2K)	B	22.2/19.2
R131	7030006000	S.RES RR0510P-222-D (2.2K)	B	22.9/21.5
R132	7030005840	S.RES RR0510P-473-D (47K)	B	23.4/22.8
R134	7030005060	S.RES ERJ2GEJ 333 X (33K)	T	25.6/20.6
R135	7030005160	S.RES ERJ2GEJ 105 X (1M)	T	14.0/21.8
R141	7030005060	S.RES ERJ2GEJ 333 X (33K)	T	26.5/32.2
R144	7030005160	S.RES ERJ2GEJ 105 X (1M)	B	22.5/36.5
R145	7030005530	S.RES ERJ2GEJ 100 X (10)	B	24.3/36.5
R147	7030005090	S.RES ERJ2GEJ 104 X (100K)	B	28.0/10.0
R148	7030005070	S.RES ERJ2GEJ 683 X (68K)	B	26.7/9.5
R150	7030010040	S.RES ERJ2GEJ-JPW	T	16.3/3.1
R151	7030005070	S.RES ERJ2GEJ 683 X (68K)	T	26.5/6.7
R152	7030008310	S.RES ERJ2GEJ 564 X (560K)	T	18.0/3.1
R153	7030005100	S.RES ERJ2GEJ 154 X (150K)	T	21.6/3.1
R154	7030006610	S.RES ERJ2GEJ 394 X (390K)	T	29.6/5.1
R155	7030005050	S.RES ERJ2GEJ 103 X (10K)	T	19.8/3.1
R157	7030005050	S.RES ERJ2GEJ 103 X (10K)	T	26.5/10.3
R161	7030005050	S.RES ERJ2GEJ 103 X (10K)	B	51.1/36.5
R162	7030005040	S.RES ERJ2GEJ 472 X (4.7K)	B	49.3/36.0
R163	7030005050	S.RES ERJ2GEJ 103 X (10K)	B	34.5/39.8
R164	7030005040	S.RES ERJ2GEJ 472 X (4.7K)	B	32.7/38.4
R165	7030005050	S.RES ERJ2GEJ 103 X (10K)	B	74.6/28.5
R166	7030007290	S.RES ERJ2GEJ 222 X (2.2K)	B	69.6/28.8
R167	7030005700	S.RES ERJ2GEJ 274 X (270K)	T	74.5/23.4
R168	7030005090	S.RES ERJ2GEJ 104 X (100K)	T	76.5/21.5
R169	7030005090	S.RES ERJ2GEJ 104 X (100K)	B	47.7/40.7
R170	7030005170	S.RES ERJ2GEJ 474 X (470K)	B	46.3/41.2
R173	7030008400	S.RES ERJ2GEJ 182 X (1.8K)	T	44.5/9.7
R180	7030005120	S.RES ERJ2GEJ 102 X (1K)	B	5.8/22.9
R181	7030005070	S.RES ERJ2GEJ 683 X (68K)	T	30.6/2.6
R182	7030005070	S.RES ERJ2GEJ 683 X (68K)	T	32.1/3.1
R183	7030005070	S.RES ERJ2GEJ 683 X (68K)	T	33.6/3.6
R184	7030005050	S.RES ERJ2GEJ 103 X (10K)	T	32.7/8.6
R185	7030005050	S.RES ERJ2GEJ 103 X (10K)	T	34.7/11.8
R186	7030005040	S.RES ERJ2GEJ 472 X (4.7K)	B	4.8/22.9
R190	7510001730	S.THE ERTJOEP 473J	B	30.9/33.3
R191	7030010080	S.RES ERJ2RHD 1003X (100K)	B	32.7/33.3
R192	7030005090	S.RES ERJ2GEJ 104 X (100K)	T	13.6/32.5
R193	7030005090	S.RES ERJ2GEJ 104 X (100K)	T	13.6/30.0
R194	7030005050	S.RES ERJ2GEJ 103 X (10K)	T	22.6/37.5
R195	7030005050	S.RES ERJ2GEJ 103 X (10K)	T	17.7/37.4
R206	7030005170	S.RES ERJ2GEJ 474 X (470K)	T	43.0/10.2
R207	7030005110	S.RES ERJ2GEJ 224 X (220K)	T	44.0/11.2
R235	7030005050	S.RES ERJ2GEJ 103 X (10K)	B	49.6/12.5
R337	7030003490	S.RES ERJ3GEYJ 272 V (2.7K)	B	63.9/6.9
R338	7030005120	S.RES ERJ2GEJ 102 X (1K)	T	61.1/10.8
R339	7030003860	S.RES ERJ3GE JPW V	T	65.5/26.4
R340	7030007340	S.RES ERJ2GEJ 153 X (15K)	T	35.2/10.3
R341	7030005090	S.RES ERJ2GEJ 104 X (100K)	T	32.7/6.8
R342	7030005070	S.RES ERJ2GEJ 683 X (68K)	T	33.7/8.1
R343	7030007570	S.RES ERJ2GEJ 122 X (1.2K)	T	35.3/8.1
C1	4030007000	S.CER C1608 CH 1H 090D-T	B	67.3/10.4
C2	4030009520	S.CER C1608 CH 1H 020B-T	B	67.3/5.8
C3	4030006990	S.CER C1608 CH 1H 080D-T	B	63.9/4.3
C4	4030009550	S.CER C1608 CH 1H 2R5B-T	B	61.9/7.2
C5	4030009920	S.CER C1608 CH 1H 050B-T	B	59.8/4.3
C6	4030017460	S.CER C1005 JB 1H 102K-T	B	59.8/6.5
C7	4030017460	S.CER C1005 JB 1H 102K-T	B	61.7/9.7
C9	4030009910	S.CER C1608 CH 1H 040B-T	B	61.1/12.8
C10	4030017460	S.CER C1005 JB 1H 102K-T	B	66.3/13.0
C12	4030007020	S.CER C1608 CH 1H 120J-T	B	68.5/13.1
C13	4030007050	S.CER C1608 CH 1H 220J-T	B	67.0/18.0
C14	4030017580	S.CER C1005 CH 1H 060C-T	B	55.8/6.8
C15	4030017460	S.CER C1005 JB 1H 102K-T	T	60.6/9.5
C16	4030009650	S.CER C1608 CH 1H 240J-T	B	66.2/22.5
C17	4030017510	S.CER C1005 CH 1H 680J-T	T	62.4/4.9
C18	4030006860	S.CER C1608 JB 1H 102K-T	T	55.3/20.0
C19	4030017460	S.CER C1005 JB 1H 102K-T	B	57.5/8.0
C20	4030017590	S.CER C1005 CH 1H 070C-T	T	59.5/7.5
C21	4030017410	S.CER C1005 CH 1H 240J-T	T	57.1/4.5
C22	4030017610	S.CER C1005 CH 1H 090C-T	T	58.5/6.5
C23	4030017350	S.CER C1005 CH 1H 020B-T	T	55.2/7.6
C24	4030017410	S.CER C1005 CH 1H 240J-T	T	53.3/4.5
C25	4030017610	S.CER C1005 CH 1H 090C-T	T	51.9/6.7
C27	4030017460	S.CER C1005 JB 1H 102K-T	T	55.7/4.0
C28	4030017460	S.CER C1005 JB 1H 102K-T	B	54.7/4.0
C30	4030017590	S.CER C1005 CH 1H 070C-T	T	50.6/7.2
C32	4030017460	S.CER C1005 JB 1H 102K-T	T	46.9/6.4
C33	4030017460	S.CER C1005 JB 1H 102K-T	T	49.3/10.3
C34	4030017420	S.CER C1005 CH 1H 470J-T	T	50.3/10.3
C35	4030016930	S.CER C1005 JB 1A 104K-T	T	51.1/8.5
C36	4030017460	S.CER C1005 JB 1H 102K-T	B	50.1/11.2
C37	4030017460	S.CER C1005 JB 1H 102K-T	B	45.4/5.4
C38	4030017460	S.CER C1005 JB 1H 102K-T	B	49.4/7.2
C39	4030017630	S.CER C1005 CH 1H 120J-T	T	44.4/6.8
C40	4030017520	S.CER C1005 CH 1H 0R3B-T	T	43.1/7.3

M.=Mounted side (T: Mounted on the Top side, B: Mounted on the Bottom side)
S.=Surface mount

[MAIN UNIT] (For IC-F61)

REF NO.	PARTS NO.	DESCRIPTION	M.	H/V LOCATION
C41	4030017380	S.CER C1005 CH 1H 050B-T	B	42.9/7.2
C42	4030017460	S.CER C1005 JB 1H 102K-T	T	39.0/4.0
C43	4030017460	S.CER C1005 JB 1H 102K-T	T	43.2/4.0
C44	4030017340	S.CER C1005 CH 1H 010B-T	B	42.9/5.4
C45	4030017630	S.CER C1005 CH 1H 120J-T	T	41.2/6.8
C46	4030017460	S.CER C1005 JB 1H 102K-T	T	40.0/4.0
C48	4030017400	S.CER C1005 CH 1H 220J-T	B	41.5/11.1
C49	4030017380	S.CER C1005 CH 1H 050B-T	B	45.5/9.9
C50	4030017460	S.CER C1005 JB 1H 102K-T	B	41.5/12.1
C51	4030017460	S.CER C1005 JB 1H 102K-T	B	39.5/7.7
C52	4030017420	S.CER C1005 CH 1H 470J-T	B	39.5/9.7
C53	4030016790	S.CER C1005 JB 1E 103K-T	B	37.7/8.7
C54	4030017460	S.CER C1005 JB 1H 102K-T	B	37.7/9.7
C56	4030017400	S.CER C1005 CH 1H 220J-T	B	33.3/9.1
C57	4030017460	S.CER C1005 JB 1H 102K-T	B	35.3/11.5
C58	4030017460	S.CER C1005 JB 1H 102K-T	B	23.6/4.1
C59	4030017460	S.CER C1005 JB 1H 102K-T	B	23.6/8.4
C60	4030017460	S.CER C1005 JB 1H 102K-T	B	23.6/7.4
C61	4030017430	S.CER C1005 CH 1H 101J-T	B	19.2/5.4
C62	4030017680	S.CER C1005 CH 1H 820J-T	B	17.9/9.7
C63	4030017420	S.CER C1005 CH 1H 470J-T	B	18.9/7.1
C65	4030017460	S.CER C1005 JB 1H 102K-T	B	18.4/8.4
C66	4030017460	S.CER C1005 JB 1H 102K-T	B	18.9/10.2
C67	4030017460	S.CER C1005 JB 1H 102K-T	B	6.4/7.3
C69	4030017730	S.CER C1005 JB 1H 471K-T	B	12.1/12.7
C70	4030017730	S.CER C1005 JB 1H 471K-T	B	11.1/12.7
C71	4030016930	S.CER C1005 JB 1A 104K-T	B	9.8/11.6
C72	4030017420	S.CER C1005 CH 1H 470J-T	B	51.0/16.0
C73	4030017460	S.CER C1005 JB 1H 102K-T	T	54.1/22.7
C74	4030017460	S.CER C1005 JB 1H 102K-T	T	60.1/10.8
C75	4550006050	S.TAN TEESVA 0J 106M8R	B	9.6/16.0
C76	4030016790	S.CER C1005 JB 1E 103K-T	T	50.1/18.3
C77	4030017460	S.CER C1005 JB 1H 102K-T	B	53.2/11.5
C78	4030017460	S.CER C1005 JB 1H 102K-T	T	56.4/14.3
C79	4030011810	S.CER C1608 JB 1A 224K-T	T	55.7/16.0
C80	4030017780	S.CER C1005 JB 1H 472K-T	T	50.1/16.5
C81	4030016790	S.CER C1005 JB 1E 103K-T	T	67.4/21.8
C82	4030017460	S.CER C1005 JB 1H 102K-T	B	69.2/23.2
C83	4030017670	S.CER C1005 CH 1H 390J-T	T	56.1/25.5
C84	4030017460	S.CER C1005 JB 1H 102K-T	T	54.1/24.7
C86	4030017650	S.CER C1005 CH 1H 270J-T	T	57.1/25.5
C88	4030017460	S.CER C1005 JB 1H 102K-T	T	52.3/28.8
C91	4030017730	S.CER C1005 JB 1H 471K-T	T	52.8/24.2
C92	4030017630	S.CER C1005 CH 1H 120J-T	T	55.8/31.0
C93	4030017380	S.CER C1005 CH 1H 050B-T	B	54.8/27.1
C97	4030017460	S.CER C1005 JB 1H 102K-T	B	51.7/32.1
C98	4030017380	S.CER C1005 CH 1H 050B-T	B	51.2/23.1
C99	4030017460	S.CER C1005 JB 1H 102K-T	B	54.7/22.3
C100	4030017620	S.CER C1005 CH 1H 100C-T	T	49.7/21.3
C102	4030017380	S.CER C1005 CH 1H 050B-T	B	48.0/26.4
C103	4030017350	S.CER C1005 CH 1H 020B-T	B	48.6/28.2
C104	4030017460	S.CER C1005 JB 1H 102K-T	B	45.2/28.7
C105	4030017460	S.CER C1005 JB 1H 102K-T	B	46.3/30.0
C106	4030017420	S.CER C1005 CH 1H 470J-T	T	50.8/30.1
C107	4030017460	S.CER C1005 JB 1H 102K-T	T	52.4/35.2
C108	4030016790	S.CER C1005 JB 1E 103K-T	B	54.2/19.2
C109	4030017460	S.CER C1005 JB 1H 102K-T	T	43.4/26.4
C110	4030017730	S.CER C1005 JB 1H 471K-T	T	43.1/30.7
C111	4030017420	S.CER C1005 CH 1H 470J-T	T	45.3/30.2
C112	4030017460	S.CER C1005 JB 1H 102K-T	B	45.9/22.5
C113	4030017520	S.CER C1005 CH 1H 0R3B-T	B	43.7/26.2
C114	4030017630	S.CER C1005 CH 1H 120J-T	B	42.1/22.4
C115	4030017620	S.CER C1005 CH 1H 100C-T	B	40.9/24.2
C116	4030017460	S.CER C1005 JB 1H 102K-T	B	40.9/25.2
C117	4030017730	S.CER C1005 JB 1H 471K-T	B	41.6/26.2
C118	4030017530	S.CER C1005 CH 1H 0R5B-T	B	43.7/27.2
C119	4030016790	S.CER C1005 JB 1E 103K-T	B	41.6/27.2
C120	4030017730	S.CER C1005 JB 1H 471K-T	B	40.6/28.6
C121	4030017600	S.CER C1005 CH 1H 080C-T	B	42.1/31.0
C122	4030017630	S.CER C1005 CH 1H 120J-T	B	43.2/32.3
C123	4030017630	S.CER C1005 CH 1H 120J-T	B	40.9/32.0
C124	4030018120	S.CER C1005 CH 1H 110J-T	B	39.6/32.3
C126	4030017390	S.CER C1005 CH 1H 180J-T	B	40.9/21.4
C127	4030017630	S.CER C1005 CH 1H 120J-T	B	39.6/21.1
C129	4030017530	S.CER C1005 CH 1H 0R5B-T	B	38.3/23.8
C130	4030016950	S.CER C1005 JB 1A 473K-T	T	31.6/23.6
C132	4030017460	S.CER C1005 JB 1H 102K-T	T	31.4/19.3
C133	4030017640	S.CER C1005 CH 1H 150J-T	B	39.6/30.5
C134	4030017640	S.CER C1005 CH 1H 150J-T	B	39.6/22.9
C135	4030017460	S.CER C1005 JB 1H 102K-T	B	36.7/28.6
C136	4030016930	S.CER C1005 JB 1A 104K-T	B	36.7/29.6
C137	4030016790	S.CER C1005 JB 1E 103K-T	B	44.1/36.9
C138	4030017460	S.CER C1005 JB 1H 102K-T	T	37.1/29.0
C139	4030016930	S.CER C1005 JB 1A 104K-T	T	46.3/34.2
C140	4030016930	S.CER C1005 JB 1A 104K-T	B	28.5/28.4
C141	4030017460	S.CER C1005 JB 1H 102K-T	B	32.7/20.6
C143	4030017460	S.CER C1005 JB 1H 102K-T	T	32.1/21.3
C144	4030017420	S.CER C1005 CH 1H 470J-T	T	36.8/27.3
C145	4030017420	S.CER C1005 CH 1H 470J-T	T	36.2/22.9
C146	4550000550	S.TAN TEESVA 1V 224M8R	T	35.2/30.3
C147	4550000460	S.TAN TEESVA 1C 105M8R	T	30.0/25.9
C148	4550006250	S.TAN TEESVA 1A 106M8R	B	43.0/40.3
C149	4030017460	S.CER C1005 JB 1H 102K-T	T	28.4/28.5
C150	4030017490	S.CER C1608 JB 1A 105K-T	T	30.2/16.8
C151	4030016930	S.CER C1005 JB 1A 104K-T	B	28.9/30.0
C152	4030017420	S.CER C1005 CH 1H 470J-T	B	31.7/16.9
C153	4030017420	S.CER C1005 CH 1H 470J-T	B	30.7/16.9
C154	4030017420	S.CER C1005 CH 1H 470J-T	B	29.7/18.5
C155	4030017420	S.CER C1005 CH 1H 470J-T	T	28.4/31.5
C156	4030017460	S.CER C1005 JB 1H 102K-T	B	25.3/27.5
C157	4030017620	S.CER C1005 CH 1H 100C-T	B	25.7/29.0
C158	4030016930	S.CER C1005 JB 1A 104K-T	B	24.8/35.2
C159	4030017460	S.CER C1005 JB 1H 102K-T	B	24.8/31.0
C161	4030017620	S.CER C1005 CH 1H 100C-T	B	25.3/23.8
C162	4030017500	S.CER C1005 CH 1H 560J-T	B	29.2/17.2

[MAIN UNIT] (For IC-F61)

REF NO.	PARTS NO.	DESCRIPTION	M.	H/V LOCATION
C163	4030017570	S.CER C1005 CH 1H 040B-T	B	27.5/15.8
C164	4030017590	S.CER C1005 CH 1H 070C-T	B	26.2/14.5
C165	4030016790	S.CER C1005 JB 1E 103K-T	B	28.7/18.5
C166	4030017360	S.CER C1005 CH 1H 030B-T	B	27.5/14.0
C167	4030016930	S.CER C1005 JB 1A 104K-T	B	6.4/6.3
C168	4030016930	S.CER C1005 JB 1A 104K-T	B	8.8/5.5
C169	4030016930	S.CER C1005 JB 1A 104K-T	B	8.8/8.1
C170	4030016930	S.CER C1005 JB 1A 104K-T	T	25.7/4.9
C171	4030018560	S.CER C2012 JB 1A 475K-T	T	24.4/3.2
C172	4030017460	S.CER C1005 JB 1H 102K-T	T	26.5/3.1
C173	4030017460	S.CER C1005 JB 1H 102K-T	T	28.2/18.3
C180	4030016930	S.CER C1005 JB 1A 104K-T	B	26.7/10.5
C188	4030017460	S.CER C1005 JB 1H 102K-T	B	17.9/6.6
C202	4030016930	S.CER C1005 JB 1A 104K-T	B	36.9/27.6
C203	4030017460	S.CER C1005 JB 1H 102K-T	B	39.8/27.3
C205	4030017380	S.CER C1005 CH 1H 050B-T	T	44.1/32.8
C206	4030017590	S.CER C1005 CH 1H 070C-T	T	40.8/33.3
C208	4030017590	S.CER C1005 CH 1H 070C-T	T	36.2/33.8
C209	4030017460	S.CER C1005 JB 1H 102K-T	T	35.2/33.8
C211	4030018560	S.CER C2012 JB 1A 475K-T	B	16.5/4.0
C213	4030017460	S.CER C1005 JB 1H 102K-T	T	29.3/13.1
C220	4030016970	S.CER C1005 JB 1E 223K-T	B	5.3/24.2
C221	4030017790	S.CER C1005 JB 1H 682K-T	T	33.6/2.6
C222	4030018080	S.CER C1005 JB 1H 182K-T	T	35.6/3.6
C223	4030017040	S.CER C1005 JB 1A 333K-T	T	32.2/4.6
C225	4030016970	S.CER C1005 JB 1E 223K-T	T	33.7/10.8
C226	4030017760	S.CER C1005 JB 1H 222K-T	B	4.5/25.2
C227	4030016790	S.CER C1005 JB 1E 103K-T	B	23.3/12.9
C228	4030017460	S.CER C1005 JB 1H 102K-T	B	18.4/13.9
C229	4030016930	S.CER C1005 JB 1A 104K-T	T	24.7/10.3
C230	4030017460	S.CER C1005 JB 1H 102K-T	T	67.4/28.3
C231	4030016790	S.CER C1005 JB 1E 103K-T	B	52.4/34.7
C232	4030016790	S.CER C1005 JB 1E 103K-T	B	32.7/40.2
C233	4550006350	S.TAN TEESVB2 1A 226M8R	B	67.1/27.2
C234	4030017730	S.CER C1005 JB 1H 471K-T	B	69.6/29.8
C235	4030016790	S.CER C1005 JB 1E 103K-T	B	66.9/31.0
C236	4510008540	S.ELE EEE1CA100SR	T	72.6/20.2
C237	4030016790	S.CER C1005 JB 1E 103K-T	T	74.0/30.2
C238	4550006480	S.TAN TEESVA 1C 475M8R	B	66.5/35.1
C239	4030017330	S.CER C1005 JF 1C 104Z-T	B	68.7/33.9
C240	4030017460	S.CER C1005 JB 1H 102K-T	B	29.6/11.0
C241	4030017460	S.CER C1005 JB 1H 102K-T	T	51.6/37.6
C242	4030017460	S.CER C1005 JB 1H 102K-T	B	34.6/36.1
C243	4030017420	S.CER C1005 CH 1H 470J-T	B	53.5/41.5
C244	4030017420	S.CER C1005 CH 1H 470J-T	B	22.2/20.2
C251	4030017420	S.CER C1005 CH 1H 470J-T	T	24.8/17.5
C252	4030017910	S.CER C1005 JB 1H 152K-T	T	26.5/31.2
C253	4030017710	S.CER C1005 CH 1H 181J-T	T	14.0/16.7
C254	4030017750	S.CER C1005 JB 1H 122K-T	T	14.8/14.6
C255	4030016930	S.CER C1005 JB 1A 104K-T	B	17.4/12.1
C256	4030017760	S.CER C1005 JB 1H 222K-T	T	13.0/18.5
C257	4030016930	S.CER C1005 JB 1A 104K-T	T	20.8/26.6
C258	4030016930	S.CER C1005 JB 1A 104K-T	T	21.8/26.6
C259	4030017400	S.CER C1005 CH 1H 220J-T	B	9.0/23.1
C260	4030017400	S.CER C1005 CH 1H 220J-T	B	22.1/23.1
C261	4550000460	S.TAN TEESVA 1C 105M8R	B	20.8/17.6
C262	4550000460	S.TAN TEESVA 1C 105M8R	B	20.8/15.5
C263	4030017460	S.CER C1005 JB 1H 102K-T	T	13.0/21.1
C264	4550006350	S.TAN TEESVB2 1A 226M8R	B	14.2/17.1
C265	4030017460	S.CER C1005 JB 1H 102K-T	T	26.1/21.9
C266	4030017720	S.CER C1005 JB 1H 331K-T	T	24.6/20.6
C267	4030017460	S.CER C1005 JB 1H 102K-T	B	22.0/12.9
C271	4030016930	S.CER C1005 JB 1A 104K-T	T	26.0/33.5
C273	4030016930	S.CER C1005 JB 1A 104K-T	B	16.5/37.2
C274	4030016930	S.CER C1005 JB 1A 104K-T	B	17.1/26.7
C275	4030017490	S.CER C1608 JB 1A 105K-T	B	6.9/41.6
C276	4030017490	S.CER C1608 JB 1A 105K-T	B	11.1/41.6
C277	4030017490	S.CER C1608 JB 1A 105K-T	B	14.2/39.9
C279	4030017650	S.CER C1005 CH 1H 270J-T	B	29.1/41.4
C280	4030017650	S.CER C1005 CH 1H 270J-T	B	16.5/41.4
C281	4030016930	S.CER C1005 JB 1A 104K-T	T	13.6/34.3
C287	4030016930	S.CER C1005 JB 1A 104K-T	B	32.7/31.8
C288	4030016930	S.CER C1005 JB 1A 104K-T	B	20.3/31.3
C289	4030016930	S.CER C1005 JB 1A 104K-T	B	19.3/32.6
C290	4030016930	S.CER C1005 JB 1A 104K-T	T	25.4/28.7
C291	4030017420	S.CER C1005 CH 1H 470J-T	B	56.1/11.9
C292	4030017460	S.CER C1005 JB 1H 102K-T	B	54.7/8.1
C293	4030017460	S.CER C1005 JB 1H 102K-T	T	79.4/21.1
C294	4030017460	S.CER C1005 JB 1H 102K-T	B	4.7/26.2
C295	4030017460	S.CER C1005 JB 1H 102K-T	T	70.1/25.1
C296	4030017460	S.CER C1005 JB 1H 102K-T	T	76.1/20.3
C297	4030017460	S.CER C1005 JB 1H 102K-T	T	77.8/21.1
C298	4030017460	S.CER C1005 JB 1H 102K-T	T	2.8/31.8
C299	4030017460	S.CER C1005 JB 1H 102K-T	T	2.8/32.8
C300	4030017460	S.CER C1005 JB 1H 102K-T	T	2.8/33.8
C301	4030017460	S.CER C1005 JB 1H 102K-T	T	2.8/30.5
C302	4030017620	S.CER C1005 CH 1H 100C-T	B	48.6/14.3
C303	4030017460	S.CER C1005 JB 1H 102K-T	B	50.9/13.0
C304	4030016930	S.CER C1005 JB 1A 104K-T	T	18.7/37.4
C305	4030016930	S.CER C1005 JB 1A 104K-T	T	24.4/37.5
C333	4030017420	S.CER C1005 CH 1H 470J-T	T	46.9/5.4
C339	4030017350	S.CER C1005 CH 1H 020B-T	T	45.4/6.8
C363	4030017580	S.CER C1005 CH 1H 060C-T	B	47.3/13.8
C364	4030017580	S.CER C1005 CH 1H 060C-T	B	46.0/11.2
C365	4030009350	S.CER C1608 CH 1H 3R5B-T	B	69.3/5.8
C366	4030017460	S.CER C1005 JB 1H 102K-T	T	65.8/27.6
C367	4030009920	S.CER C1608 CH 1H 050B-T	B	58.5/4.8
C368	4030017420	S.CER C1005 CH 1H 470J-T	T	66.3/28.9
C369	4030006860	S.CER C1608 JB 1H 102K-T	T	55.3/18.7
C370	4030017460	S.CER C1005 JB 1H 102K-T	B	51.7/26.2
C371	4030017460	S.CER C1005 JB 1H 102K-T	T	62.1/10.8
C372	4030017600	S.CER C1005 CH 1H 080C-T	B	53.5/26.2
C373	4030017460	S.CER C1005 JB 1H 102K-T	T	52.6/30.1
C374	4550007180	S.TAN F931C685MAABMA	B	52.6/15.7
C375	4550006250	S.TAN TEESVA 1A 106M8R	T	49.7/33.5

M.=Mounted side (T: Mounted on the Top side, B: Mounted on the Bottom side)
S.=Surface mount

[MAIN UNIT] (For IC-F61)

REF NO.	PARTS NO.	DESCRIPTION	M.	H/V LOCATION
J1	6510023521	S.CON 54104-3696(3692)	T	7.4/25.3
F1	5210000951	S.FUS 0468001.NR (0430001)	T	77.5/25.7
S1	2260002750	S.SWI EVQP7M01K	T	81.3/24.0
EP1	6910015370	S.BEA ACZ1005Y-102-T	T	43.4/25.2
EP3	6910015370	S.BEA ACZ1005Y-102-T	B	24.8/33.4
EP4	6910015600	S.BEA ACZ1005Y-241 (240)	T	24.3/16.1
EP5	6910015600	S.BEA ACZ1005Y-241 (240)	T	13.5/19.8

[MAIN-A UNIT] (For IC-F61-L)

REF NO.	PARTS NO.	DESCRIPTION	M.	H/V LOCATION
IC1	1110003201	S.IC TA31136FNG(EL)	B	13.6/8.1
IC2	1130008561	S.IC TC75S51F(TE85LF)	T	52.3/17.1
IC4	1140005991	S.IC MB15A02PFV1-G-BND-ERE1	B	28.7/24.1
IC5	1110002751	S.IC TA75S01F(TE85RF)	T	30.1/7.3
IC6	1190000350	S.IC M62363FP-650C	T	19.7/8.9
IC7	1190001860	S.IC EW-460-FT	B	50.7/39.9
IC9	1110005350	S.IC NJM2870F05-TE1-#FZZB	T	73.3/28.0
IC10	1110006221	S.IC AK2346P-E2/P	T	18.9/19.6
IC11	1130006221	S.IC TC4W53FU(TE12LF)	T	25.2/25.0
IC12	1130011760	S.IC CD4094BPWR	T	16.9/32.2
IC13	1130011770	S.IC CD4066BPWR	T	22.7/32.2
IC14	1110004990	S.IC FX214LG/TR	B	9.8/32.5
IC15	1130007991	S.IC TC3W03FU(TE12LF)	B	22.5/33.4
Q1	1560000841	S.FET 2SK1829(TE85RF)	T	46.4/10.8
Q2	1580000731	S.FET 3SK293(TE85LF)	T	47.3/8.2
Q3	1580000760	S.FET 3SK299-T1 U73	B	42.0/9.3
Q4	1530002601	S.TRA 2SC4215-O(TE85RF)	B	21.3/4.5
Q5	1530004180	S.TRA 2SC3356-T1B YS (R25)	B	53.5/30.6
Q7	1560001232	S.FET RD07MVS2-T112	T	59.9/21.9
Q8	1560001241	S.FET RD01MUS1-T113	T	60.2/28.0
Q9	1530003311	S.TRA 2SC5107-O(TE85RF)	B	53.2/24.4
Q10	1530003311	S.TRA 2SC5107-O(TE85RF)	B	48.0/23.2
Q11	1530003311	S.TRA 2SC5107-O(TE85RF)	B	46.1/26.6
Q12	1530003311	S.TRA 2SC5107-O(TE85RF)	B	48.0/31.9
Q13	1530002920	S.TRA 2SC4226-T1 R25	B	42.4/29.1
Q14	1530002920	S.TRA 2SC4226-T1 R25	B	43.0/24.3
Q15	1590001400	S.TRA XP1214(TX)	T	47.5/27.2
Q16	1590000430	S.TRA DTC144EUA T106	T	47.2/29.9
Q17	1530002851	S.TRA 2SC4116-BL(TE85RF)	B	46.4/37.8
Q18	1560000541	S.FET 2SK880-Y(T5RICOMF)	T	34.2/21.6
Q21	1510000920	S.TRA 2SA1577 T106 Q	B	53.0/36.5
Q22	1510000920	S.TRA 2SA1577 T106 Q	B	34.5/37.9
Q23	1520000450	S.TRA 2SB1132 T100 Q	B	71.8/25.4
Q24	1590001190	S.TRA XP6501-(TX).AB	B	72.0/29.2
Q25	1590000720	S.TRA DTA144EUA T106	B	68.8/31.6
Q26	1590003321	S.FET TPC6103(TE85LF)	T	72.3/24.4
Q27	1590000720	S.TRA DTA144EUA T106	B	19.5/34.5
Q29	1590000430	S.TRA DTC144EUA T106	B	54.7/39.7
Q34	1530002851	S.TRA 2SC4116-BL(TE85RF)	B	25.6/17.8
Q35	1590001650	S.TRA XP4601(TX)	T	34.5/5.6
D1	1790001670	S.DIO RB706F-40T106	T	57.3/10.4
D2	1750000581	S.DIO 1SV307(TPH3F)	B	59.9/9.1
D3	1750000711	S.VAR HVC350BTRF-E	T	60.2/3.6
D4	1750000711	S.VAR HVC350BTRF-E	T	60.2/4.9
D5	1790001261	S.DIO MA2S077G0L	B	57.1/4.8
D6	1790001241	S.DIO MA2S7280GL	T	60.7/7.2
D7	1750000711	S.VAR HVC350BTRF-E	T	50.0/3.6
D8	1750000711	S.VAR HVC350BTRF-E	T	50.0/4.9
D9	1750000711	S.VAR HVC350BTRF-E	T	44.4/4.6
D10	1750000711	S.VAR HVC350BTRF-E	T	41.2/4.6
D12	1750002020	S.DIO DA2S10100L	B	45.9/40.0
D14	1790001261	S.DIO MA2S077G0L	B	52.5/22.0
D15	1790001261	S.DIO MA2S077G0L	B	51.4/19.8
D16	1750001740	S.VAR HVC327CTRU-E	B	37.1/32.8
D17	1750000711	S.VAR HVC350BTRF-E	B	37.1/20.6
D18	1720000570	S.VAR MA368(TX)	B	36.6/25.0
D21	1750001740	S.VAR HVC327CTRU-E	B	39.4/25.6
D22	1750000711	S.VAR HVC350BTRF-E	B	38.9/28.9
D25	1750002020	S.DIO DA2S10100L	T	42.8/9.0
D37	1750002020	S.DIO DA2S10100L	B	31.5/30.1
D38	1750002020	S.DIO DA2S10100L	T	52.5/14.8
D39	1790001670	S.DIO RB706F-40T106	T	63.9/10.4
FI1	2030000150	S.MON DSF753SB 46.350 MHz (FL-335)	B	31.7/5.8
FI2	2020002410	CER LTM450FW <JJE>		
FI3	2040001440	S.LC NFE31PT152Z1E9L (NFM60R20T152)	B	71.8/21.2
X1	6070000300	S.DIS JTBM450CX24 <JJE>	T	11.5/9.1
X2	6050011940	S.XTA CR-783 TTS14VSB-A6 15.3 MHz	B	27.8/33.6
X3	6050011560	S.XTA CR-746 SMD-49TA 4.000 MHz <KDS>	B	22.8/39.7
X4	6050011730	S.XTA CR-765 SMD-49TA 3.6864 MHz <KDS>	B	15.3/21.4
L1	6200012490	S.COI 0.30-0.9-6TR 13.6N <COMO>	B	65.6/6.1
L2	6200013010	S.COI 0.30-0.9-5TL 10.3N <COMO>	B	61.9/5.5
L3	6200012610	S.COI 0.40-0.9-2TL 2.8N <COMO>	B	62.2/11.2
L4	6200012610	S.COI 0.40-0.9-2TL 2.8N <COMO>	B	67.4/16.2
L5	6200010850	S.COI LQW18AN22NG00D (LQW1608A22NG00)	B	58.0/6.8
L7	6200007710	S.COI LQW2BHN27NJ03L	T	57.0/6.6
L8	6200007710	S.COI LQW2BHN27NJ03L	T	53.4/6.6
L9	6200007230	S.COI LQW2BHN15NJ03L	B	46.9/7.2
L11	6200007690	S.COI LQW2BHN18NJ03L	B	41.4/5.3
L12	6200005741	S.COI ELJRE 47NGFA	B	44.0/10.8
L13	6200003350	S.COI ELJNC R27K-F	B	38.8/11.5
L15	6200002851	S.COI NLV25T-R82J	B	56.9/9.8
L17	6200013010	S.COI 0.30-0.9-5TL 10.3N <COMO>	B	68.2/21.4
L19	6200005671	S.COI ELJRE 12NGFA	B	52.1/33.3
L20	6200005691	S.COI ELJRE 18NGFA	B	53.1/27.4
L21	6200006991	S.COI ELJRE 56NGFA	B	46.2/21.3
L22	6200005701	S.COI ELJRE 22NGFA	B	46.9/28.5
L23	6200002790	S.COI ELJFC R82M-F	T	43.6/23.3
L25	6200013581	S.COI 0.30-0.9-4TR 8.6J <COMO>	B	37.8/31.1
L26	6200014240	S.COI 0.30-0.9-3TR 5.8J <COMO>	B	37.8/22.3
L27	6200004951	S.COI NLV25T-1R8J	T	37.5/31.1
L28	6200002940	S.COI ELJFC 1R2K-F	T	38.3/22.6

M.=Mounted side (T: Mounted on the Top side, B: Mounted on the Bottom side)
S.=Surface mount

[MAIN-A UNIT] (For IC-F61-L)

REF NO.	PARTS NO.	DESCRIPTION	M.	H/V LOCATION
L29	6200004660	S.COI MLF1608A 1R8K-T	T	27.6/30.0
L30	6200007720	S.COI LQW2BHN33NJ03L	T	62.4/7.0
L32	6200005741	S.COI ELJRE 47NGFA	T	39.0/34.1
L33	6200004480	S.COI MLF1608D R82K-T	B	25.8/15.7
L35	6200003540	S.COI MLF1608D R22K-T	B	27.5/18.0
L38	6200005721	S.COI ELJRE 33NGFA	B	47.4/12.0
L40	6200002851	S.COI NLV25T-R82J	T	43.9/28.1
L41	6200005741	S.COI ELJRE 47NGFA	B	46.1/32.0
L42	6200004951	S.COI NLV25T-1R8J	T	40.0/30.3
L43	6200002940	S.COI ELJFC 1R2K-F	T	39.3/26.1
L44	6200012940	S.COI 0.30-0.9-2TR 2.5N <COMO>	B	64.3/12.3
L45	6200012490	S.COI 0.30-0.9-6TR 13.6N <COMO>	B	68.3/8.1
R1	7030003490	S.RES ERJ3GEYJ 272 V (2.7K)	B	59.7/11.4
R2	7030005120	S.RES ERJ2GEJ 102 X (1K)	T	59.1/10.0
R3	7030004970	S.RES ERJ2GEJ 470 X (47)	T	52.0/19.8
R4	7030005050	S.RES ERJ2GEJ 103 X (10K)	T	55.5/10.0
R5	7030005050	S.RES ERJ2GEJ 103 X (10K)	T	54.5/14.8
R6	7030005090	S.RES ERJ2GEJ 104 X (100K)	T	47.8/16.0
R7	7030005310	S.RES ERJ2GEJ 124 X (120K)	T	49.1/16.5
R8	7030005170	S.RES ERJ2GEJ 474 X (470K)	T	54.5/16.6
R9	7030008280	S.RES ERJ2GEJ 271 X (270)	T	53.6/19.8
R10	7030005120	S.RES ERJ2GEJ 102 X (1K)	T	54.1/21.7
R11	7030005090	S.RES ERJ2GEJ 104 X (100K)	T	57.1/3.5
R12	7030005530	S.RES ERJ2GEJ 100 X (10)	T	48.3/10.3
R13	7030005090	S.RES ERJ2GEJ 104 X (100K)	T	53.3/3.5
R14	7030005050	S.RES ERJ2GEJ 103 X (10K)	T	54.7/4.0
R15	7030005240	S.RES ERJ2GEJ 473 X (47K)	T	48.3/5.9
R16	7030004980	S.RES ERJ2GEJ 101 X (100)	T	46.9/4.4
R17	7030004970	S.RES ERJ2GEJ 470 X (47)	B	48.4/7.2
R18	7030005050	S.RES ERJ2GEJ 103 X (10K)	T	50.1/8.5
R19	7030005080	S.RES ERJ2GEJ 823 X (82K)	T	49.1/7.7
R20	7030009140	S.RES ERJ2GEJ 272 X (2.7K)	B	45.4/7.2
R21	7030005110	S.RES ERJ2GEJ 224 X (220K)	T	43.2/5.8
R22	7030005050	S.RES ERJ2GEJ 103 X (10K)	T	38.7/5.3
R23	7030005110	S.RES ERJ2GEJ 224 X (220K)	T	40.0/5.8
R25	7030005040	S.RES ERJ2GEJ 472 X (4.7K)	B	43.9/7.2
R29	7030007270	S.RES ERJ2GEJ 151 X (150)	B	41.5/13.1
R30	7030005120	S.RES ERJ2GEJ 102 X (1K)	B	39.5/8.7
R31	7030004980	S.RES ERJ2GEJ 101 X (100)	B	36.7/11.5
R32	7030004980	S.RES ERJ2GEJ 101 X (100)	B	37.7/7.7
R33	7030007270	S.RES ERJ2GEJ 151 X (150)	B	25.4/4.1
R34	7030005110	S.RES ERJ2GEJ 224 X (220K)	B	23.1/5.9
R35	7030004980	S.RES ERJ2GEJ 101 X (100)	B	22.3/7.9
R36	7030005030	S.RES ERJ2GEJ 152 X (1.5K)	T	13.5/13.6
R37	7030005000	S.RES ERJ2GEJ 471 X (470)	B	21.8/6.4
R38	7030005090	S.RES ERJ2GEJ 104 X (100K)	B	20.2/7.6
R39	7030004970	S.RES ERJ2GEJ 470 X (47)	B	7.7/6.8
R40	7030007270	S.RES ERJ2GEJ 151 X (150)	B	8.7/6.8
R43	7030004970	S.RES ERJ2GEJ 470 X (47)	B	17.4/11.1
R44	7030005090	S.RES ERJ2GEJ 104 X (100K)	B	11.6/11.4
R45	7030005070	S.RES ERJ2GEJ 683 X (68K)	B	14.4/13.2
R46	7030005000	S.RES ERJ2GEJ 471 X (470)	B	13.1/12.7
R50	7030004980	S.RES ERJ2GEJ 101 X (100)	B	49.6/14.3
R51	7030003670	S.RES ERJ3GEYJ 823 V (82K)	B	69.9/10.4
R52	7030004980	S.RES ERJ2GEJ 101 X (100)	B	54.2/9.4
R53	7030005530	S.RES ERJ2GEJ 100 X (10)	T	55.6/24.2
R54	7030005060	S.RES ERJ2GEJ 333 X (33K)	T	55.1/25.5
R55	7030005040	S.RES ERJ2GEJ 472 X (4.7K)	T	53.6/26.0
R57	7030007270	S.RES ERJ2GEJ 151 X (150)	T	55.8/30.0
R58	7030005060	S.RES ERJ2GEJ 333 X (33K)	T	53.1/31.4
R59	7030005040	S.RES ERJ2GEJ 472 X (4.7K)	T	52.3/26.5
R61	7030004970	S.RES ERJ2GEJ 470 X (47)	B	51.2/30.6
R62	7030005220	S.RES ERJ2GEJ 223 X (22K)	B	54.8/32.6
R65	7030004980	S.RES ERJ2GEJ 101 X (100)	B	51.2/28.1
R66	7030007340	S.RES ERJ2GEJ 153 X (15K)	B	51.2/24.9
R67	7030004980	S.RES ERJ2GEJ 101 X (100)	B	53.7/22.3
R68	7030005050	S.RES ERJ2GEJ 103 X (10K)	B	53.7/20.5
R69	7030005040	S.RES ERJ2GEJ 472 X (4.7K)	T	49.7/20.3
R70	7030005530	S.RES ERJ2GEJ 100 X (10)	B	45.9/24.5
R71	7030005240	S.RES ERJ2GEJ 473 X (47K)	B	45.9/23.5
R73	7030004980	S.RES ERJ2GEJ 101 X (100)	B	44.5/30.0
R74	7030005090	S.RES ERJ2GEJ 104 X (100K)	B	44.2/28.7
R75	7030005100	S.RES ERJ2GEJ 154 X (150K)	B	48.1/30.0
R76	7030004980	S.RES ERJ2GEJ 101 X (100)	B	45.0/31.3
R77	7030005050	S.RES ERJ2GEJ 103 X (10K)	T	48.1/32.0
R78	7030005000	S.RES ERJ2GEJ 471 X (470)	T	46.3/23.8
R79	7030006020	S.RES RR0510P-682-D (6.8K)	B	40.8/22.9
R80	7030008370	S.RES ERJ2GEJ 561 X (560)	T	45.5/26.4
R81	7030009320	S.RES ERJ2GEJ 4R7 X (4.7)	B	43.4/21.9
R83	7030006020	S.RES RR0510P-682-D (6.8K)	B	40.6/30.5
R84	7030006020	S.RES RR0510P-682-D (6.8K)	B	42.2/32.3
R85	7030006020	S.RES RR0510P-682-D (6.8K)	B	42.4/21.1
R86	7030005530	S.RES ERJ2GEJ 100 X (10)	B	38.0/25.1
R87	7030005110	S.RES ERJ2GEJ 224 X (220K)	T	37.0/24.9
R89	7030005050	S.RES ERJ2GEJ 103 X (10K)	T	33.9/23.5
R90	7030005170	S.RES ERJ2GEJ 474 X (470K)	T	32.5/17.2
R92	7030005310	S.RES ERJ2GEJ 124 X (120K)	T	33.0/18.5
R93	7030005120	S.RES ERJ2GEJ 102 X (1K)	B	31.0/28.4
R94	7030005100	S.RES ERJ2GEJ 154 X (150K)	B	30.3/30.5
R95	7030005120	S.RES ERJ2GEJ 102 X (1K)	T	36.0/24.9
R96	7030008410	S.RES ERJ2GEJ 392 X (3.9K)	T	32.6/23.6
R97	7030005120	S.RES ERJ2GEJ 102 X (1K)	T	31.9/24.9
R98	7030007290	S.RES ERJ2GEJ 222 X (2.2K)	B	44.6/38.2
R100	7030005040	S.RES ERJ2GEJ 472 X (4.7K)	B	32.7/21.6
R101	7030005000	S.RES ERJ2GEJ 471 X (470)	T	32.1/22.3
R103	7030005240	S.RES ERJ2GEJ 473 X (47K)	T	28.8/14.5
R104	7030005230	S.RES ERJ2GEJ 334 X (330K)	T	26.0/12.5
R105	7030005170	S.RES ERJ2GEJ 474 X (470K)	T	29.3/12.1
R106	7030005060	S.RES ERJ2GEJ 333 X (33K)	T	27.2/16.3
R107	7030005090	S.RES ERJ2GEJ 104 X (100K)	T	26.7/15.0
R108	7030005050	S.RES ERJ2GEJ 103 X (10K)	B	26.7/30.0
R109	7030005580	S.RES ERJ2GEJ 560 X (56)	T	37.2/33.8
R111	7030005090	S.RES ERJ2GEJ 104 X (100K)	T	36.4/20.4

[MAIN-A UNIT] (For IC-F61-L)

REF NO.	PARTS NO.	DESCRIPTION	M.	H/V LOCATION
R113	7030006610	S.RES ERJ2GEJ 394 X (390K)	T	39.3/28.2
R114	7030005100	S.RES ERJ2GEJ 154 X (150K)	B	38.2/26.9
R115	7030007570	S.RES ERJ2GEJ 122 X (1.2K)	B	27.0/19.8
R116	7030007060	S.RES ERJ2GEJ 684X (680K)	B	25.2/19.8
R117	7030005040	S.RES ERJ2GEJ 472 X (4.7K)	B	31.7/19.3
R118	7030005040	S.RES ERJ2GEJ 472 X (4.7K)	B	30.7/19.3
R119	7030005050	S.RES ERJ2GEJ 103 X (10K)	B	18.9/12.6
R120	7030005000	S.RES ERJ2GEJ 471 X (470)	T	24.7/13.6
R121	7030008010	S.RES ERJ2GEJ 123 X (12K)	T	25.8/17.5
R122	7030006610	S.RES ERJ2GEJ 394 X (390K)	T	25.3/18.8
R123	7030005080	S.RES ERJ2GEJ 823 X (82K)	T	13.0/16.7
R124	7030005060	S.RES ERJ2GEJ 333 X (33K)	T	13.5/15.4
R125	7030005240	S.RES ERJ2GEJ 473 X (47K)	T	16.1/14.8
R126	7030005160	S.RES ERJ2GEJ 105 X (1M)	T	14.0/18.5
R127	7030005060	S.RES ERJ2GEJ 333 X (33K)	T	20.8/24.8
R128	7030005060	S.RES ERJ2GEJ 333 X (33K)	T	21.8/24.8
R129	7030005840	S.RES RR0510P-473-D (47K)	B	22.0/13.9
R130	7030006000	S.RES RR0510P-222-D (2.2K)	B	22.2/19.2
R131	7030006000	S.RES RR0510P-222-D (2.2K)	B	22.9/21.5
R132	7030005840	S.RES RR0510P-473-D (47K)	B	23.4/22.8
R134	7030005060	S.RES ERJ2GEJ 333 X (33K)	T	25.6/20.6
R135	7030005160	S.RES ERJ2GEJ 105 X (1M)	T	14.0/21.8
R141	7030005060	S.RES ERJ2GEJ 333 X (33K)	T	26.5/32.2
R144	7030005160	S.RES ERJ2GEJ 105 X (1M)	B	22.5/36.5
R145	7030005530	S.RES ERJ2GEJ 100 X (10)	B	24.3/36.5
R147	7030005090	S.RES ERJ2GEJ 104 X (100K)	B	28.0/10.0
R148	7030005070	S.RES ERJ2GEJ 683 X (68K)	B	26.7/9.5
R150	7030010040	S.RES ERJ2GEJ-JPW	T	16.3/3.1
R151	7030005070	S.RES ERJ2GEJ 683 X (68K)	T	26.5/6.7
R152	7030008310	S.RES ERJ2GEJ 564 X (560K)	T	18.0/3.1
R153	7030005100	S.RES ERJ2GEJ 154 X (150K)	T	21.6/3.1
R154	7030006610	S.RES ERJ2GEJ 394 X (390K)	T	29.6/5.1
R155	7030005050	S.RES ERJ2GEJ 103 X (10K)	T	19.8/3.1
R157	7030005050	S.RES ERJ2GEJ 103 X (10K)	T	26.5/10.3
R161	7030005050	S.RES ERJ2GEJ 103 X (10K)	B	51.1/36.5
R162	7030005040	S.RES ERJ2GEJ 472 X (4.7K)	B	49.3/36.0
R163	7030005050	S.RES ERJ2GEJ 103 X (10K)	B	34.5/39.8
R164	7030005040	S.RES ERJ2GEJ 472 X (4.7K)	B	32.7/38.4
R165	7030005050	S.RES ERJ2GEJ 103 X (10K)	B	74.6/28.5
R166	7030007290	S.RES ERJ2GEJ 222 X (2.2K)	B	69.6/28.8
R167	7030005700	S.RES ERJ2GEJ 274 X (270K)	T	74.5/23.4
R168	7030005090	S.RES ERJ2GEJ 104 X (100K)	T	76.5/21.5
R169	7030005090	S.RES ERJ2GEJ 104 X (100K)	B	47.7/40.7
R170	7030005170	S.RES ERJ2GEJ 474 X (470K)	B	46.3/41.2
R173	7030008400	S.RES ERJ2GEJ 182 X (1.8K)	T	44.5/9.7
R180	7030005120	S.RES ERJ2GEJ 102 X (1K)	B	5.8/22.9
R181	7030005070	S.RES ERJ2GEJ 683 X (68K)	T	30.6/2.6
R182	7030005070	S.RES ERJ2GEJ 683 X (68K)	T	32.1/3.1
R183	7030005070	S.RES ERJ2GEJ 683 X (68K)	T	33.6/3.6
R184	7030005050	S.RES ERJ2GEJ 103 X (10K)	T	32.7/8.6
R185	7030005050	S.RES ERJ2GEJ 103 X (10K)	T	34.7/11.8
R186	7030005040	S.RES ERJ2GEJ 472 X (4.7K)	B	4.8/22.9
R190	7510001730	S.THE ERTJOEP 473J	B	30.9/33.3
R191	7030010080	S.RES ERJ2RHD 1003X (100K)	B	32.7/33.3
R192	7030005090	S.RES ERJ2GEJ 104 X (100K)	T	13.6/32.5
R193	7030005090	S.RES ERJ2GEJ 104 X (100K)	T	13.6/30.0
R194	7030005050	S.RES ERJ2GEJ 103 X (10K)	T	22.6/37.5
R195	7030005050	S.RES ERJ2GEJ 103 X (10K)	T	17.7/37.4
R206	7030005170	S.RES ERJ2GEJ 474 X (470K)	T	43.0/10.2
R207	7030005110	S.RES ERJ2GEJ 224 X (220K)	T	44.0/11.2
R235	7030005050	S.RES ERJ2GEJ 103 X (10K)	B	49.6/12.5
R337	7030003490	S.RES ERJ3GEYJ 272 V (2.7K)	B	63.9/6.9
R338	7030005120	S.RES ERJ2GEJ 102 X (1K)	T	61.1/10.8
R339	7030003860	S.RES ERJ3GE JPW V	T	65.5/26.4
R340	7030007340	S.RES ERJ2GEJ 153 X (15K)	T	35.2/10.3
R341	7030005090	S.RES ERJ2GEJ 104 X (100K)	T	32.7/6.8
R342	7030005070	S.RES ERJ2GEJ 683 X (68K)	T	33.7/8.1
R343	7030007570	S.RES ERJ2GEJ 122 X (1.2K)	T	35.3/8.1
C1	4030007010	S.CER C1608 CH 1H 100D-T	B	67.3/10.4
C2	4030009910	S.CER C1608 CH 1H 040B-T	B	67.3/5.8
C3	4030007020	S.CER C1608 CH 1H 120J-T	B	63.9/4.3
C4	4030009910	S.CER C1608 CH 1H 040B-T	B	61.9/7.2
C5	4030011770	S.CER C1608 CH 1H 060B-T	B	59.8/4.3
C6	4030017460	S.CER C1005 JB 1H 102K-T	B	59.8/6.5
C7	4030017460	S.CER C1005 JB 1H 102K-T	B	61.7/9.7
C9	4030006990	S.CER C1608 CH 1H 080D-T	B	61.1/12.8
C10	4030017460	S.CER C1005 JB 1H 102K-T	B	66.3/13.0
C12	4030007050	S.CER C1608 CH 1H 220J-T	B	68.5/13.1
C13	4030009650	S.CER C1608 CH 1H 240J-T	B	67.0/18.0
C14	4030017600	S.CER C1005 CH 1H 080C-T	B	55.8/6.8
C15	4030017460	S.CER C1005 JB 1H 102K-T	T	60.6/9.5
C16	4030007060	S.CER C1608 CH 1H 270J-T	B	66.2/22.5
C17	4030017510	S.CER C1005 CH 1H 680J-T	T	62.4/4.9
C19	4030017460	S.CER C1005 JB 1H 102K-T	B	57.5/8.0
C20	4030017590	S.CER C1005 CH 1H 070C-T	T	59.5/7.5
C21	4030017650	S.CER C1005 CH 1H 270J-T	T	57.1/4.5
C22	4030017620	S.CER C1005 CH 1H 100C-T	T	58.5/6.5
C23	4030017560	S.CER C1005 CH 1H 2R5B-T	T	55.2/7.6
C24	4030017650	S.CER C1005 CH 1H 270J-T	T	53.3/4.5
C25	4030017620	S.CER C1005 CH 1H 100C-T	T	51.9/6.7
C27	4030017460	S.CER C1005 JB 1H 102K-T	T	55.7/4.0
C28	4030017460	S.CER C1005 JB 1H 102K-T	B	54.7/4.0
C30	4030017590	S.CER C1005 CH 1H 070C-T	T	50.6/7.2
C32	4030017460	S.CER C1005 JB 1H 102K-T	T	46.9/6.4
C33	4030017460	S.CER C1005 JB 1H 102K-T	T	49.3/10.3
C34	4030017420	S.CER C1005 CH 1H 470J-T	T	50.3/10.3
C35	4030016930	S.CER C1005 JB 1A 104K-T	T	51.1/8.5
C36	4030017460	S.CER C1005 JB 1H 102K-T	B	50.1/11.2
C37	4030017460	S.CER C1005 JB 1H 102K-T	B	45.4/5.4
C38	4030017460	S.CER C1005 JB 1H 102K-T	B	49.4/7.2
C39	4030017630	S.CER C1005 CH 1H 120J-T	T	44.4/6.8
C40	4030017520	S.CER C1005 CH 1H 0R3B-T	T	43.1/7.3
C41	4030017380	S.CER C1005 CH 1H 050B-T	B	42.9/7.2

M.=Mounted side (T: Mounted on the Top side, B: Mounted on the Bottom side)
S.=Surface mount

[MAIN-A UNIT] (For IC-F61-L)

REF NO.	PARTS NO.	DESCRIPTION	M.	H/V LOCATION
C42	4030017460	S.CER C1005 JB 1H 102K-T	T	39.0/4.0
C43	4030017460	S.CER C1005 JB 1H 102K-T	T	43.2/4.0
C44	4030017550	S.CER C1005 CH 1H 1R5B-T	B	42.9/5.4
C45	4030017630	S.CER C1005 CH 1H 120J-T	T	41.2/6.8
C46	4030017460	S.CER C1005 JB 1H 102K-T	T	40.0/4.0
C48	4030017400	S.CER C1005 CH 1H 220J-T	B	41.5/11.1
C49	4030017570	S.CER C1005 CH 1H 040B-T	B	45.5/9.9
C50	4030017460	S.CER C1005 JB 1H 102K-T	B	41.5/12.1
C51	4030017460	S.CER C1005 JB 1H 102K-T	B	39.5/7.7
C52	4030017420	S.CER C1005 CH 1H 470J-T	B	39.5/9.7
C53	4030016790	S.CER C1005 JB 1E 103K-T	B	37.7/8.7
C54	4030017460	S.CER C1005 JB 1H 102K-T	B	37.7/9.7
C56	4030017400	S.CER C1005 CH 1H 220J-T	B	33.3/9.1
C57	4030017460	S.CER C1005 JB 1H 102K-T	B	35.3/11.5
C58	4030017460	S.CER C1005 JB 1H 102K-T	B	23.6/4.1
C59	4030017460	S.CER C1005 JB 1H 102K-T	B	23.6/8.4
C60	4030017460	S.CER C1005 JB 1H 102K-T	B	23.6/7.4
C61	4030017430	S.CER C1005 CH 1H 101J-T	B	19.2/5.4
C62	4030017680	S.CER C1005 CH 1H 820J-T	B	17.9/9.7
C63	4030017420	S.CER C1005 CH 1H 470J-T	B	18.9/7.1
C65	4030017460	S.CER C1005 JB 1H 102K-T	B	18.4/8.4
C66	4030017460	S.CER C1005 JB 1H 102K-T	B	18.9/10.2
C67	4030017460	S.CER C1005 JB 1H 102K-T	B	6.4/7.3
C69	4030017730	S.CER C1005 JB 1H 471K-T	B	12.1/12.7
C70	4030017730	S.CER C1005 JB 1H 471K-T	B	11.1/12.7
C71	4030016930	S.CER C1005 JB 1A 104K-T	B	9.8/11.6
C72	4030017420	S.CER C1005 CH 1H 470J-T	B	51.0/16.0
C73	4030017460	S.CER C1005 JB 1H 102K-T	T	54.1/22.7
C74	4030017460	S.CER C1005 JB 1H 102K-T	T	60.1/10.8
C75	4550006050	S.TAN TEESVA 0J 106M8R	B	9.6/16.0
C76	4030016790	S.CER C1005 JB 1E 103K-T	T	50.1/18.3
C77	4030017460	S.CER C1005 JB 1H 102K-T	B	53.2/11.5
C78	4030017460	S.CER C1005 JB 1H 102K-T	T	56.4/14.3
C79	4030011810	S.CER C1608 JB 1A 224K-T	T	55.7/16.0
C80	4030017780	S.CER C1005 JB 1H 472K-T	T	50.1/16.5
C81	4030016790	S.CER C1005 JB 1E 103K-T	T	67.4/21.8
C82	4030017460	S.CER C1005 JB 1H 102K-T	B	69.2/23.2
C83	4030017670	S.CER C1005 CH 1H 390J-T	T	56.1/25.5
C84	4030017460	S.CER C1005 JB 1H 102K-T	T	54.1/24.7
C86	4030017420	S.CER C1005 CH 1H 470J-T	T	57.1/25.5
C88	4030017460	S.CER C1005 JB 1H 102K-T	T	52.3/28.8
C91	4030017730	S.CER C1005 JB 1H 471K-T	T	52.8/24.2
C92	4030017600	S.CER C1005 CH 1H 080C-T	T	55.8/31.0
C93	4030017350	S.CER C1005 CH 1H 020B-T	B	54.8/27.1
C97	4030017460	S.CER C1005 JB 1H 102K-T	B	51.7/32.1
C98	4030017350	S.CER C1005 CH 1H 020B-T	B	51.2/23.1
C99	4030017460	S.CER C1005 JB 1H 102K-T	B	54.7/22.3
C100	4030017660	S.CER C1005 CH 1H 330J-T	T	49.7/21.3
C102	4030017590	S.CER C1005 CH 1H 070C-T	B	48.0/26.4
C103	4030017360	S.CER C1005 CH 1H 030B-T	B	48.6/28.2
C104	4030017460	S.CER C1005 JB 1H 102K-T	B	45.2/28.7
C105	4030017460	S.CER C1005 JB 1H 102K-T	B	46.3/30.0
C106	4030017420	S.CER C1005 CH 1H 470J-T	T	50.8/30.1
C107	4030017460	S.CER C1005 JB 1H 102K-T	T	52.4/35.2
C108	4030016790	S.CER C1005 JB 1E 103K-T	B	54.2/19.2
C109	4030017460	S.CER C1005 JB 1H 102K-T	T	43.4/26.4
C110	4030017730	S.CER C1005 JB 1H 471K-T	T	43.1/30.7
C111	4030017420	S.CER C1005 CH 1H 470J-T	T	45.3/30.2
C112	4030017460	S.CER C1005 JB 1H 102K-T	B	45.9/22.5
C113	4030017520	S.CER C1005 CH 1H 0R3B-T	B	43.7/26.2
C114	4030017390	S.CER C1005 CH 1H 180J-T	B	42.1/22.4
C115	4030017630	S.CER C1005 CH 1H 120J-T	B	40.9/24.2
C116	4030017460	S.CER C1005 JB 1H 102K-T	B	40.9/25.2
C117	4030017730	S.CER C1005 JB 1H 471K-T	B	41.6/26.2
C118	4030017530	S.CER C1005 CH 1H 0R5B-T	B	43.7/27.2
C119	4030016790	S.CER C1005 JB 1E 103K-T	B	41.6/27.2
C120	4030017730	S.CER C1005 JB 1H 471K-T	B	40.6/28.6
C121	4030017630	S.CER C1005 CH 1H 120J-T	B	42.1/31.0
C122	4030017390	S.CER C1005 CH 1H 180J-T	B	43.2/32.3
C123	4030017650	S.CER C1005 CH 1H 270J-T	B	40.9/32.0
C124	4030017640	S.CER C1005 CH 1H 150J-T	B	39.6/32.3
C126	4030018010	S.CER C1005 CH 1H 360J-T	B	40.9/21.4
C127	4030017640	S.CER C1005 CH 1H 150J-T	B	39.6/21.1
C129	4030017530	S.CER C1005 CH 1H 0R5B-T	B	38.3/23.8
C130	4030016950	S.CER C1005 JB 1A 473K-T	T	31.6/23.6
C132	4030017460	S.CER C1005 JB 1H 102K-T	T	31.4/19.3
C133	4030017410	S.CER C1005 CH 1H 240J-T	B	39.6/30.5
C134	4030017390	S.CER C1005 CH 1H 180J-T	B	39.6/22.9
C135	4030017460	S.CER C1005 JB 1H 102K-T	B	36.7/28.6
C136	4030016930	S.CER C1005 JB 1A 104K-T	B	36.7/29.6
C137	4030016790	S.CER C1005 JB 1E 103K-T	B	44.1/36.9
C138	4030017460	S.CER C1005 JB 1H 102K-T	T	37.1/29.0
C139	4030016930	S.CER C1005 JB 1A 104K-T	T	46.3/34.2
C140	4030016930	S.CER C1005 JB 1A 104K-T	B	28.5/28.4
C141	4030017460	S.CER C1005 JB 1H 102K-T	B	32.7/20.6
C143	4030017460	S.CER C1005 JB 1H 102K-T	T	32.1/21.3
C144	4030017420	S.CER C1005 CH 1H 470J-T	T	36.8/27.3
C145	4030017420	S.CER C1005 CH 1H 470J-T	T	36.2/22.9
C146	4550000550	S.TAN TEESVA 1V 224M8R	T	35.2/30.3
C147	4550000460	S.TAN TEESVA 1C 105M8R	T	30.0/25.9
C148	4550006250	S.TAN TEESVA 1A 106M8R	B	43.0/40.3
C149	4030017460	S.CER C1005 JB 1H 102K-T	T	28.4/28.5
C150	4030017490	S.CER C1608 JB 1A 105K-T	T	30.2/16.8
C151	4030016930	S.CER C1005 JB 1A 104K-T	B	28.9/30.0
C152	4030017420	S.CER C1005 CH 1H 470J-T	B	31.7/16.9
C153	4030017420	S.CER C1005 CH 1H 470J-T	B	30.7/16.9
C154	4030017420	S.CER C1005 CH 1H 470J-T	B	29.7/18.5
C155	4030017420	S.CER C1005 CH 1H 470J-T	T	28.4/31.5
C156	4030017460	S.CER C1005 JB 1H 102K-T	B	25.3/27.5
C157	4030017620	S.CER C1005 CH 1H 100C-T	B	25.7/29.0
C158	4030016930	S.CER C1005 JB 1A 104K-T	B	24.8/35.2
C159	4030017460	S.CER C1005 JB 1H 102K-T	B	24.8/31.0
C161	4030017620	S.CER C1005 CH 1H 100C-T	B	25.3/23.8
C162	4030017500	S.CER C1005 CH 1H 560J-T	B	29.2/17.2
C163	4030017570	S.CER C1005 CH 1H 040B-T	B	27.5/15.8

[MAIN-A UNIT] (For IC-F61-L)

REF NO.	PARTS NO.	DESCRIPTION	M.	H/V LOCATION
C164	4030017590	S.CER C1005 CH 1H 070C-T	B	26.2/14.5
C165	4030016790	S.CER C1005 JB 1E 103K-T	B	28.7/18.5
C166	4030017360	S.CER C1005 CH 1H 030B-T	B	27.5/14.0
C167	4030016930	S.CER C1005 JB 1A 104K-T	B	6.4/6.3
C168	4030016930	S.CER C1005 JB 1A 104K-T	B	8.8/5.5
C169	4030016930	S.CER C1005 JB 1A 104K-T	B	8.8/8.1
C170	4030016930	S.CER C1005 JB 1A 104K-T	T	25.7/4.9
C171	4030018560	S.CER C2012 JB 1A 475K-T	T	24.4/3.2
C172	4030017460	S.CER C1005 JB 1H 102K-T	T	26.5/3.1
C173	4030017460	S.CER C1005 JB 1H 102K-T	T	28.2/18.3
C180	4030016930	S.CER C1005 JB 1A 104K-T	B	26.7/10.5
C188	4030017460	S.CER C1005 JB 1H 102K-T	B	17.9/6.6
C202	4030016930	S.CER C1005 JB 1A 104K-T	B	36.9/27.6
C203	4030017460	S.CER C1005 JB 1H 102K-T	B	39.8/27.3
C205	4030017590	S.CER C1005 CH 1H 070C-T	T	44.1/32.8
C206	4030017580	S.CER C1005 CH 1H 060C-T	T	40.8/33.3
C208	4030017580	S.CER C1005 CH 1H 060C-T	T	36.2/33.8
C209	4030017460	S.CER C1005 JB 1H 102K-T	T	35.2/33.8
C211	4030018560	S.CER C2012 JB 1A 475K-T	B	16.5/4.0
C213	4030017460	S.CER C1005 JB 1H 102K-T	T	29.3/13.1
C220	4030016970	S.CER C1005 JB 1E 223K-T	B	5.3/24.2
C221	4030017790	S.CER C1005 JB 1H 682K-T	T	33.6/2.6
C222	4030018080	S.CER C1005 JB 1H 182K-T	T	35.6/3.6
C223	4030017040	S.CER C1005 JB 1A 333K-T	T	32.2/4.6
C225	4030016970	S.CER C1005 JB 1E 223K-T	T	33.7/10.8
C226	4030017760	S.CER C1005 JB 1H 222K-T	B	4.5/25.2
C227	4030016790	S.CER C1005 JB 1E 103K-T	B	23.3/12.9
C228	4030017460	S.CER C1005 JB 1H 102K-T	B	18.4/13.9
C229	4030016930	S.CER C1005 JB 1A 104K-T	T	24.7/10.3
C230	4030017460	S.CER C1005 JB 1H 102K-T	T	67.4/28.3
C231	4030016790	S.CER C1005 JB 1E 103K-T	B	52.4/34.7
C232	4030016790	S.CER C1005 JB 1E 103K-T	B	32.7/40.2
C233	4550006350	S.TAN TEESVB2 1A 226M8R	B	67.1/27.2
C234	4030017730	S.CER C1005 JB 1H 471K-T	B	69.6/29.8
C235	4030016790	S.CER C1005 JB 1E 103K-T	B	66.9/31.0
C236	4510008540	S.ELE EEE1CA100SR	T	72.6/20.2
C237	4030016790	S.CER C1005 JB 1E 103K-T	T	74.0/30.2
C238	4550006480	S.TAN TEESVA 1C 475M8R	B	66.5/35.1
C239	4030017330	S.CER C1005 JF 1C 104Z-T	B	68.7/33.9
C240	4030017460	S.CER C1005 JB 1H 102K-T	B	29.6/11.0
C241	4030017460	S.CER C1005 JB 1H 102K-T	T	51.6/37.6
C242	4030017460	S.CER C1005 JB 1H 102K-T	B	34.6/36.1
C243	4030017420	S.CER C1005 CH 1H 470J-T	B	53.5/41.5
C244	4030017420	S.CER C1005 CH 1H 470J-T	B	22.2/20.2
C251	4030017420	S.CER C1005 CH 1H 470J-T	T	24.8/17.5
C252	4030017910	S.CER C1005 JB 1H 152K-T	T	26.5/31.2
C253	4030017710	S.CER C1005 CH 1H 181J-T	T	14.0/16.7
C254	4030017750	S.CER C1005 JB 1H 122K-T	T	14.8/14.6
C255	4030016930	S.CER C1005 JB 1A 104K-T	B	17.4/12.1
C256	4030017760	S.CER C1005 JB 1H 222K-T	T	13.0/18.5
C257	4030016930	S.CER C1005 JB 1A 104K-T	T	20.8/26.6
C258	4030016930	S.CER C1005 JB 1A 104K-T	T	21.8/26.6
C259	4030017400	S.CER C1005 CH 1H 220J-T	B	9.0/23.1
C260	4030017400	S.CER C1005 CH 1H 220J-T	B	22.1/23.1
C261	4550000460	S.TAN TEESVA 1C 105M8R	B	20.8/17.6
C262	4550000460	S.TAN TEESVA 1C 105M8R	B	20.8/15.5
C263	4030017460	S.CER C1005 JB 1H 102K-T	T	13.0/21.1
C264	4550006350	S.TAN TEESVB2 1A 226M8R	B	14.2/17.1
C265	4030017460	S.CER C1005 JB 1H 102K-T	T	26.1/21.9
C266	4030017720	S.CER C1005 JB 1H 331K-T	T	24.6/20.6
C267	4030017460	S.CER C1005 JB 1H 102K-T	B	22.0/12.9
C271	4030016930	S.CER C1005 JB 1A 104K-T	T	26.0/33.5
C273	4030016930	S.CER C1005 JB 1A 104K-T	B	16.5/37.2
C274	4030016930	S.CER C1005 JB 1A 104K-T	B	17.1/26.7
C275	4030017490	S.CER C1608 JB 1A 105K-T	B	6.9/41.6
C276	4030017490	S.CER C1608 JB 1A 105K-T	B	11.1/41.6
C277	4030017490	S.CER C1608 JB 1A 105K-T	B	14.2/39.9
C279	4030017650	S.CER C1005 CH 1H 270J-T	B	29.1/41.4
C280	4030017650	S.CER C1005 CH 1H 270J-T	B	16.5/41.4
C281	4030016930	S.CER C1005 JB 1A 104K-T	T	13.6/34.3
C287	4030016930	S.CER C1005 JB 1A 104K-T	B	32.7/31.8
C288	4030016930	S.CER C1005 JB 1A 104K-T	B	20.3/31.3
C289	4030016930	S.CER C1005 JB 1A 104K-T	B	19.3/32.6
C290	4030016930	S.CER C1005 JB 1A 104K-T	T	25.4/28.7
C291	4030017420	S.CER C1005 CH 1H 470J-T	B	56.1/11.9
C292	4030017460	S.CER C1005 JB 1H 102K-T	B	54.7/8.1
C293	4030017460	S.CER C1005 JB 1H 102K-T	T	79.4/21.1
C294	4030017460	S.CER C1005 JB 1H 102K-T	B	4.7/26.2
C295	4030017460	S.CER C1005 JB 1H 102K-T	T	70.1/25.1
C296	4030017460	S.CER C1005 JB 1H 102K-T	T	76.1/20.3
C297	4030017460	S.CER C1005 JB 1H 102K-T	T	77.8/21.1
C298	4030017460	S.CER C1005 JB 1H 102K-T	T	2.8/31.8
C299	4030017460	S.CER C1005 JB 1H 102K-T	T	2.8/32.8
C300	4030017460	S.CER C1005 JB 1H 102K-T	T	2.8/33.8
C301	4030017460	S.CER C1005 JB 1H 102K-T	T	2.8/30.5
C302	4030017640	S.CER C1005 CH 1H 150J-T	B	48.6/14.3
C303	4030017460	S.CER C1005 JB 1H 102K-T	B	50.9/13.0
C304	4030016930	S.CER C1005 JB 1A 104K-T	T	18.7/37.4
C305	4030016930	S.CER C1005 JB 1A 104K-T	T	24.4/37.5
C333	4030017420	S.CER C1005 CH 1H 470J-T	T	46.9/5.4
C339	4030017560	S.CER C1005 CH 1H 2R5B-T	T	45.4/6.8
C363	4030017590	S.CER C1005 CH 1H 070C-T	B	47.3/13.8
C364	4030017590	S.CER C1005 CH 1H 070C-T	B	46.0/11.2
C365	4030009550	S.CER C1608 CH 1H 2R5B-T	B	69.3/5.8
C366	4030017460	S.CER C1005 JB 1H 102K-T	T	65.8/27.6
C367	4030006980	S.CER C1608 CH 1H 070D-T	B	58.5/4.8
C368	4030017420	S.CER C1005 CH 1H 470J-T	T	66.3/28.9
C370	4030017460	S.CER C1005 JB 1H 102K-T	B	51.7/26.2
C371	4030017460	S.CER C1005 JB 1H 102K-T	T	62.1/10.8
C372	4030017600	S.CER C1005 CH 1H 080C-T	B	53.5/26.2
C373	4030017460	S.CER C1005 JB 1H 102K-T	T	52.6/30.1
C374	4550007180	S.TAN F931C685MAABMA	B	52.6/15.7
C375	4550006250	S.TAN TEESVA 1A 106M8R	T	49.7/33.5

M.=Mounted side (T: Mounted on the Top side, B: Mounted on the Bottom side)
S.=Surface mount

[MAIN-A UNIT] (For IC-F61-L)

REF NO.	PARTS NO.	DESCRIPTION	M.	H/V LOCATION
J1	6510023521	S.CON 54104-3696(3692)	T	7.4/25.3
F1	5210000951	S.FUS 0468001.NR (0430001)	T	77.5/25.7
S1	2260002750	S.SWI EVQP7M01K	T	81.3/24.0
EP1	6910015370	S.BEA ACZ1005Y-102-T	T	43.4/25.2
EP3	6910015370	S.BEA ACZ1005Y-102-T	B	24.8/33.4
EP4	6910015600	S.BEA ACZ1005Y-241 (240)	T	24.3/16.1
EP5	6910015600	S.BEA ACZ1005Y-241 (240)	T	13.5/19.8

M.=Mounted side (T: Mounted on the Top side, B: Mounted on the Bottom side)
S.=Surface mount

BOARD LAYOUTS

The combination of top side and bottom side of this page shows the actual configuration of P.C. board.

• FRONT UNIT (TOP VIEW)

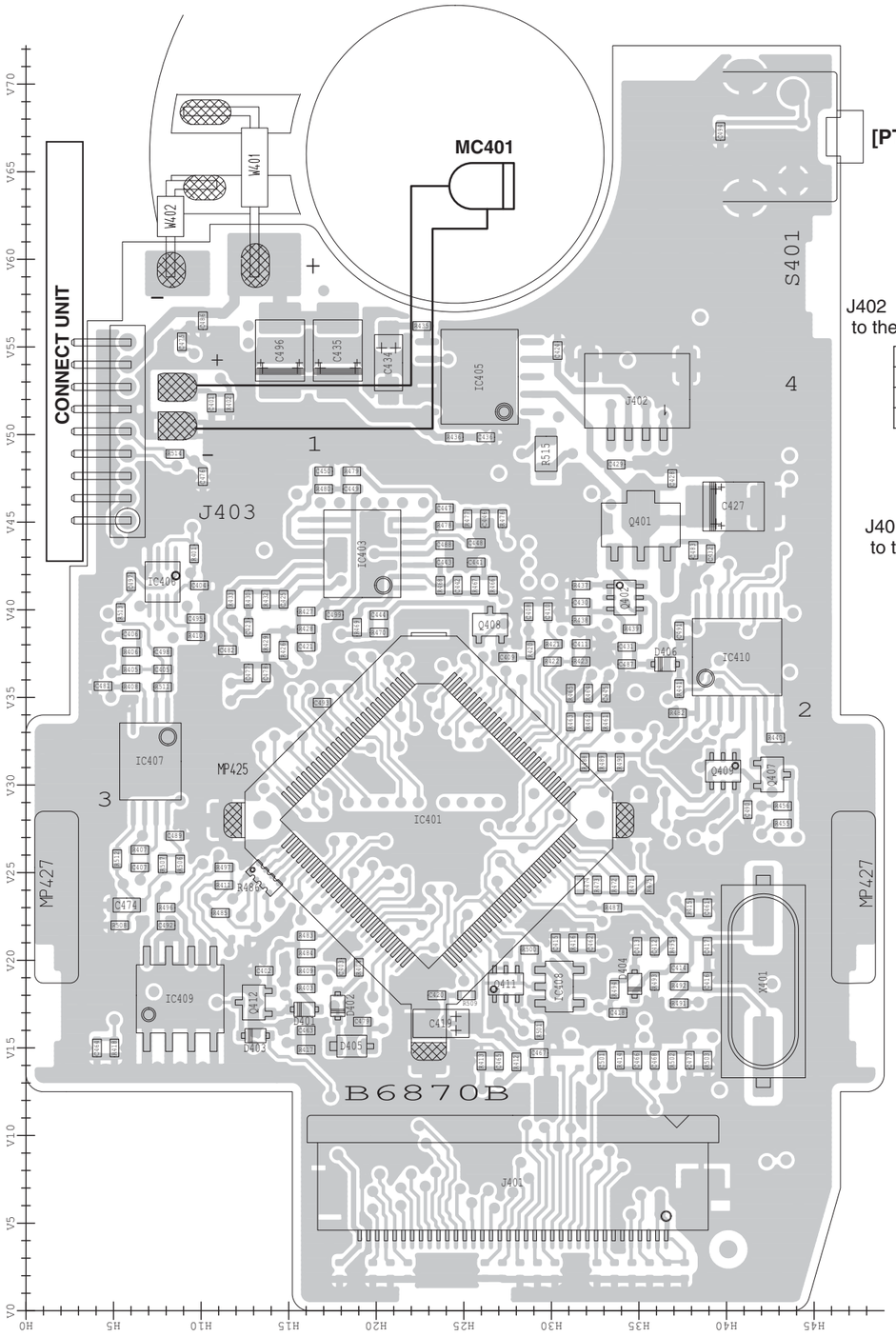

J402
to the VR UNIT W601

DUSE	4
AFOUT	
SIGNAL	
PWON	1

• VR UNIT (TOP VIEW)

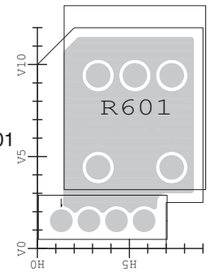

J401
to the MAIN UNIT J1

MIC	36
GND	
TONE	
CDCS	
SIGNAL	
SO	
SCK	
MDIO	
MSCK	
SCST	
PLST	
SCAT	
EXSM	
EXOE	
MTDT	
MTCK	
NOIS	
SDEC	
CDEC	
KR1	
LVIN	
RSSI	
TEMP	
UNLK	
MDIR	
MRDF	
DAST	
CSFT	
PWON	
GND	
GND	
S5V	
CPU5	
NC	
VCC	
VCC	1

• CONNECT UNIT (TOP VIEW)

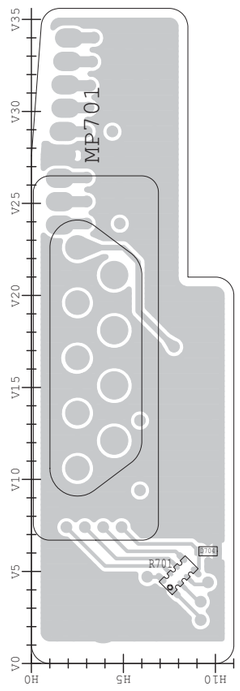

J1
to the FRONT UNIT J401

VCC	36
VCC	
NC	
+5V	
S5V	
GND	
GND	
PWON	
CSFT	
DAST	
MRDF	
MDIA	
UNLK	
TEMP	
RSSI	
LVIN	
KR1	
CDEC	
SDEC	
NOIS	
MTCK	
MTOT	
EXOE	
EXSM	
SCAT	
PLST	
SCST	
MSCK	
MDIO	
SCK	
SO	
SIGNAL	
CDCS	
TONE	
GND	
MIC	1

• MAIN UNIT (TOP VIEW)

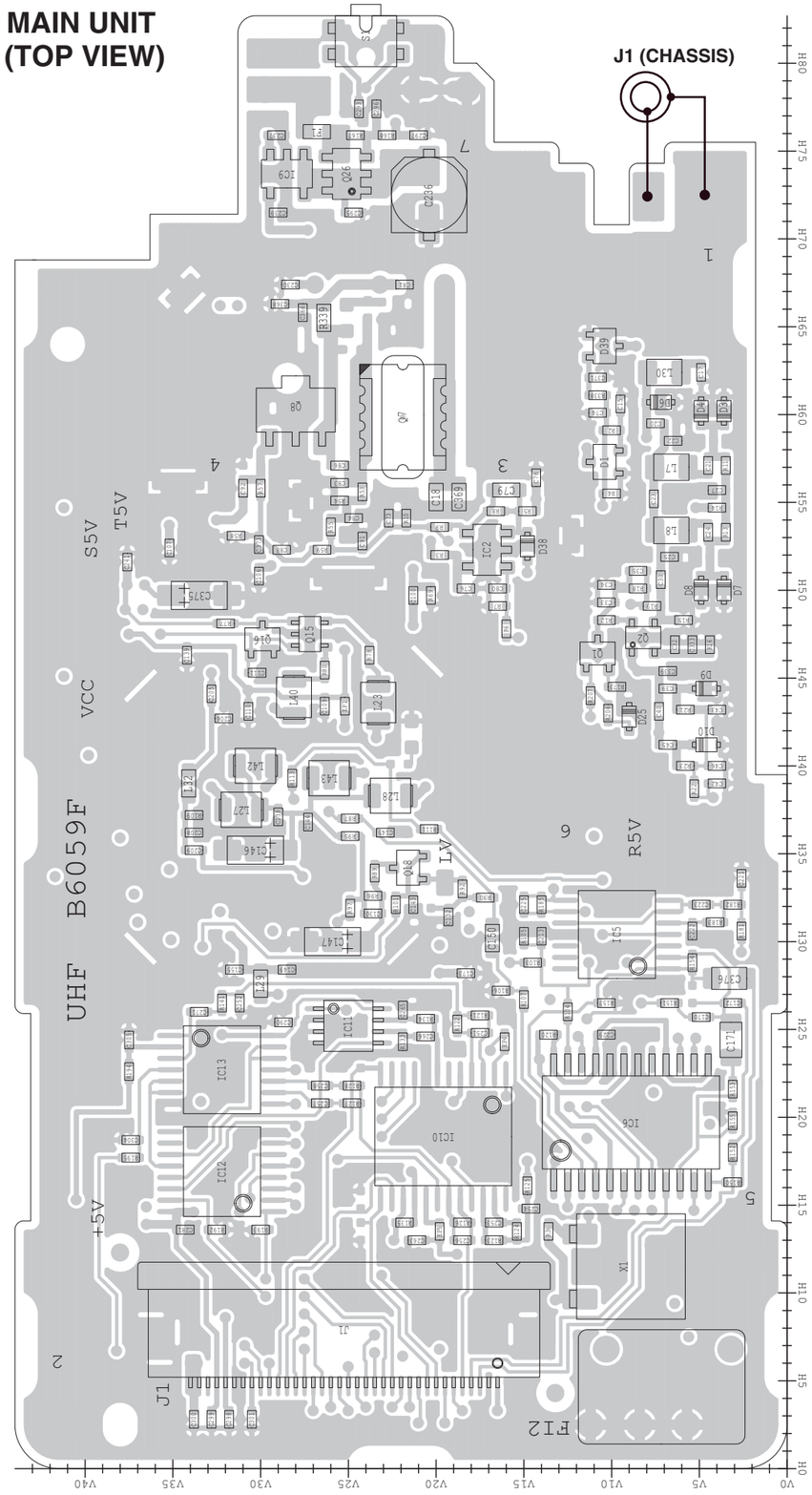

The combination of top side and bottom side of this page shows the actual configuration of P.C. board.

• MAIN UNIT (BOTTOM VIEW)

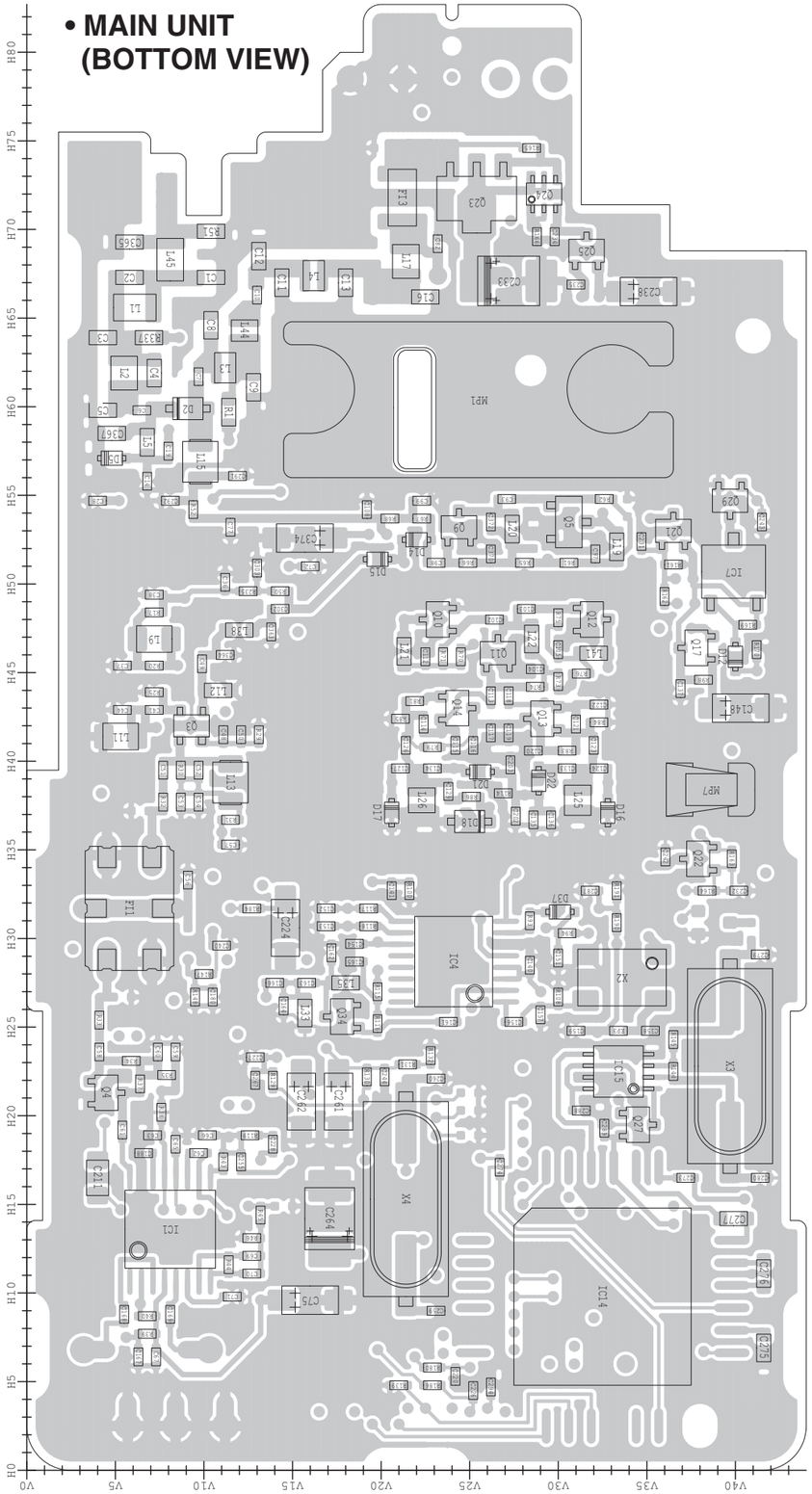

• VR UNIT (BOTTOM VIEW)

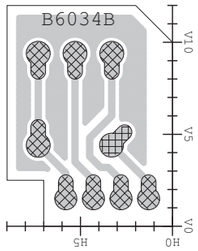

• CONNECT UNIT (BOTTOM VIEW)

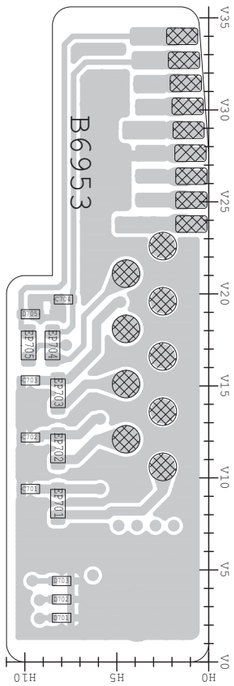

• FRONT UNIT (BOTTOM VIEW)

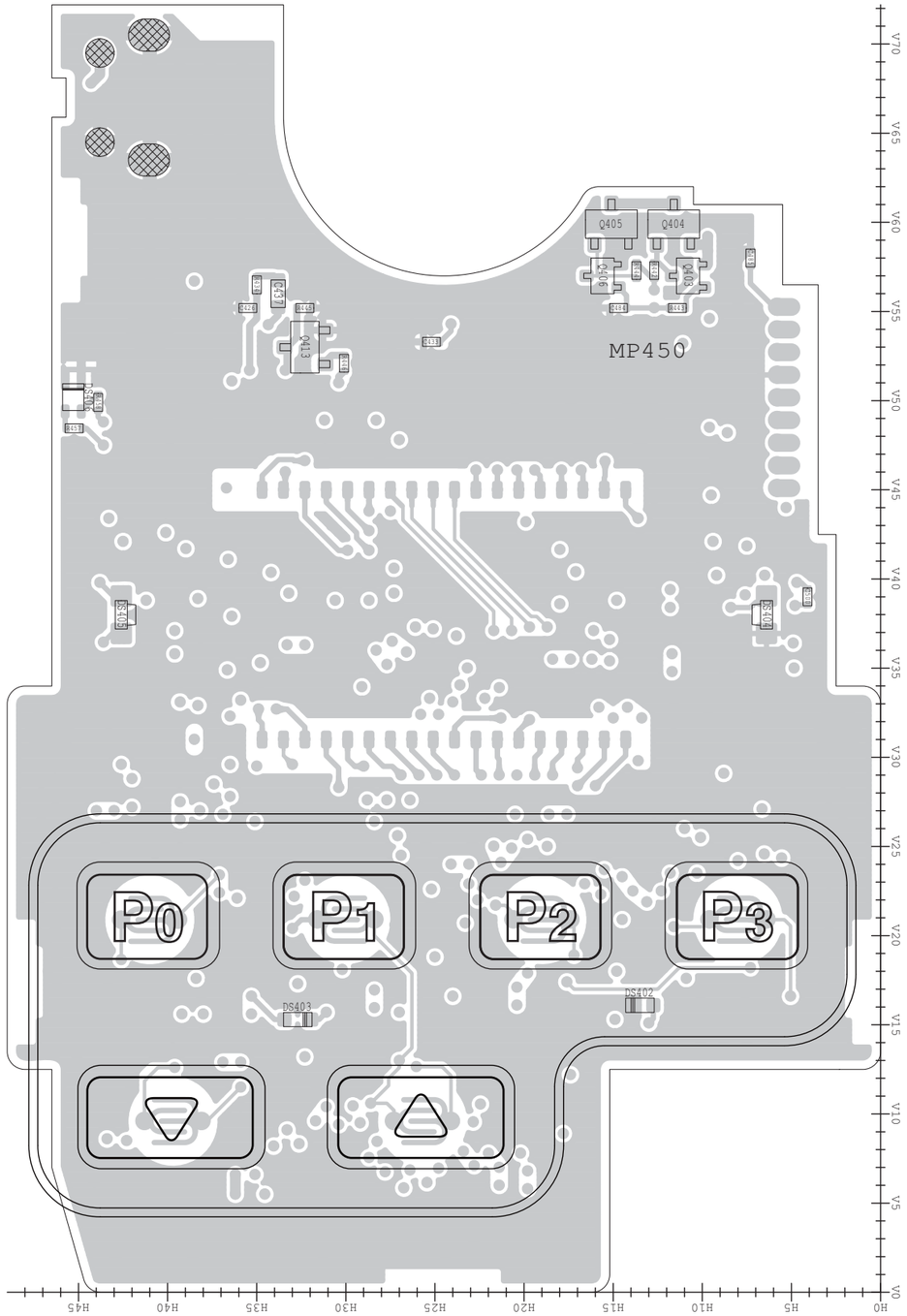

• **For IC-F61-L**

• **MAIN-A UNIT (TOP VIEW)**

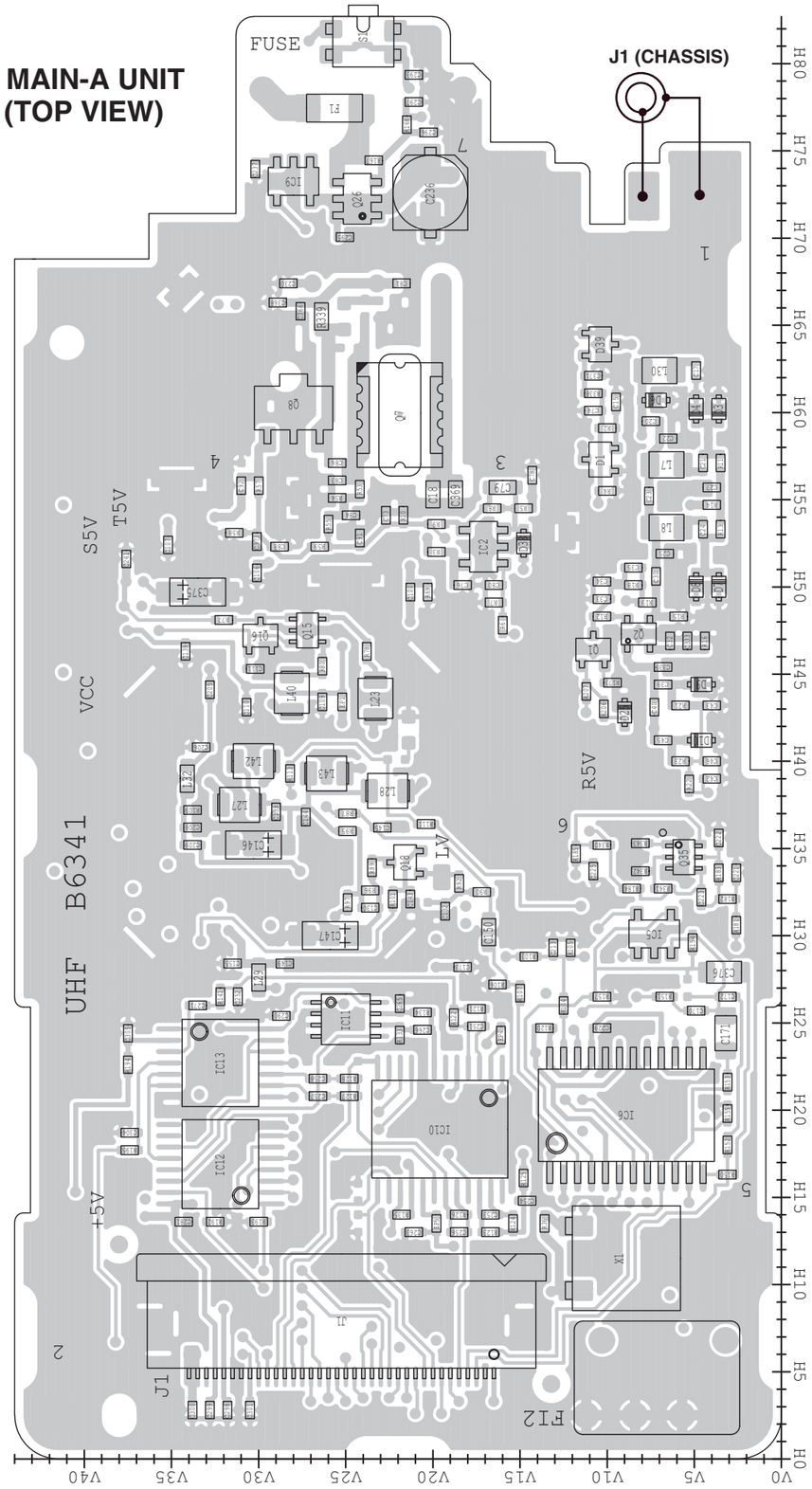

• **MAIN-A UNIT (BOTTOM VIEW)**

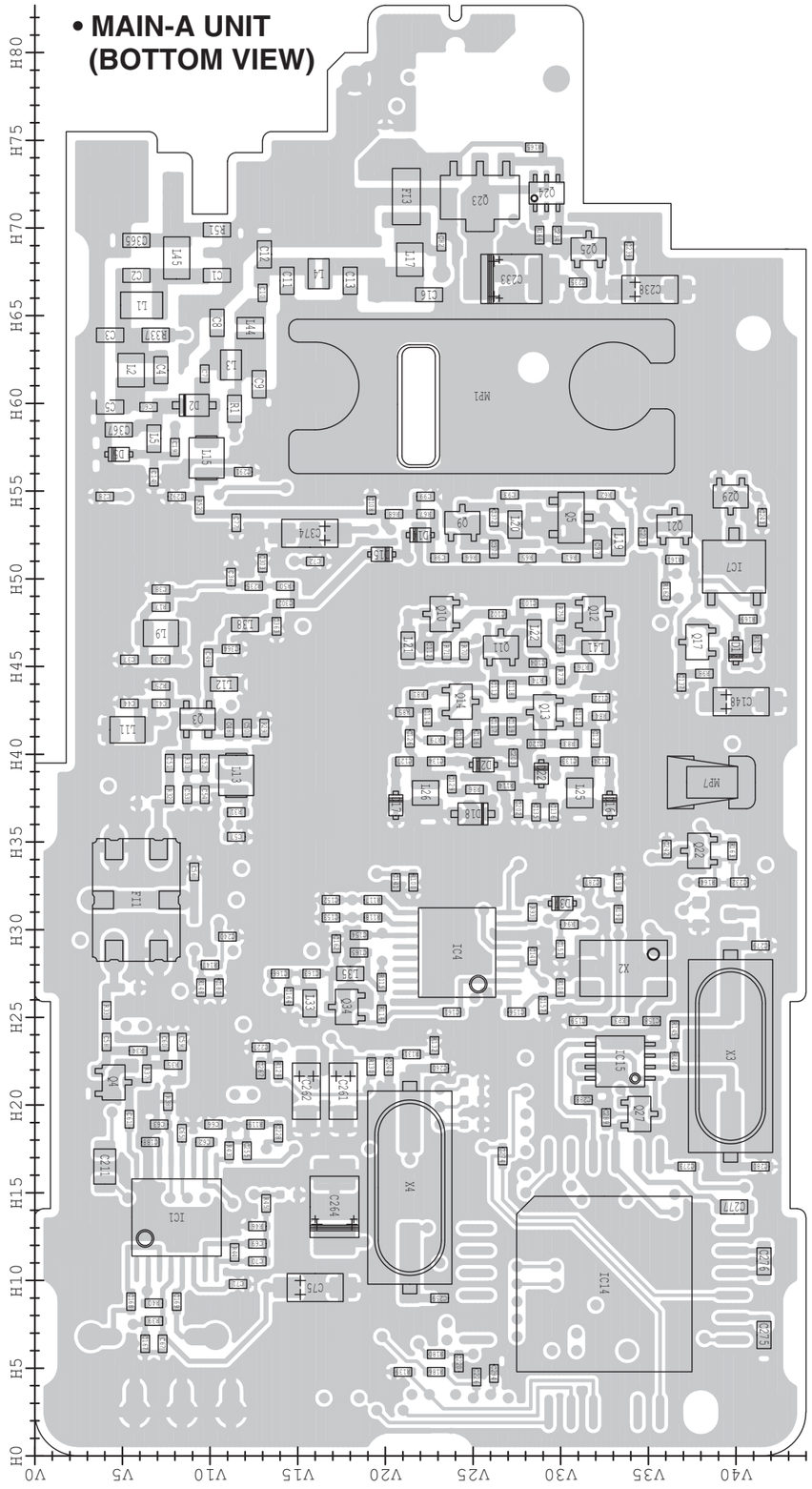

J1
to the FRONT UNIT J401

36	VCC
	VCC
	NC
	+5V
	S5V
	GND
	GND
	PWON
	CSFT
	DAST
	MRDF
	MDIA
	UNLK
	TEMP
	RSSI
	LVIN
	KR1
	CDEC
	SDEC
	NOIS
	MTCK
	MTOT
	EXOE
	EXSM
	SCAT
	PLST
	SCST
	MSCK
	MDIO
	SCK
	SO
	SIGNAL
	CDCS
	TONE
	GND
1	MIC

VOLTAGE DIAGRAM

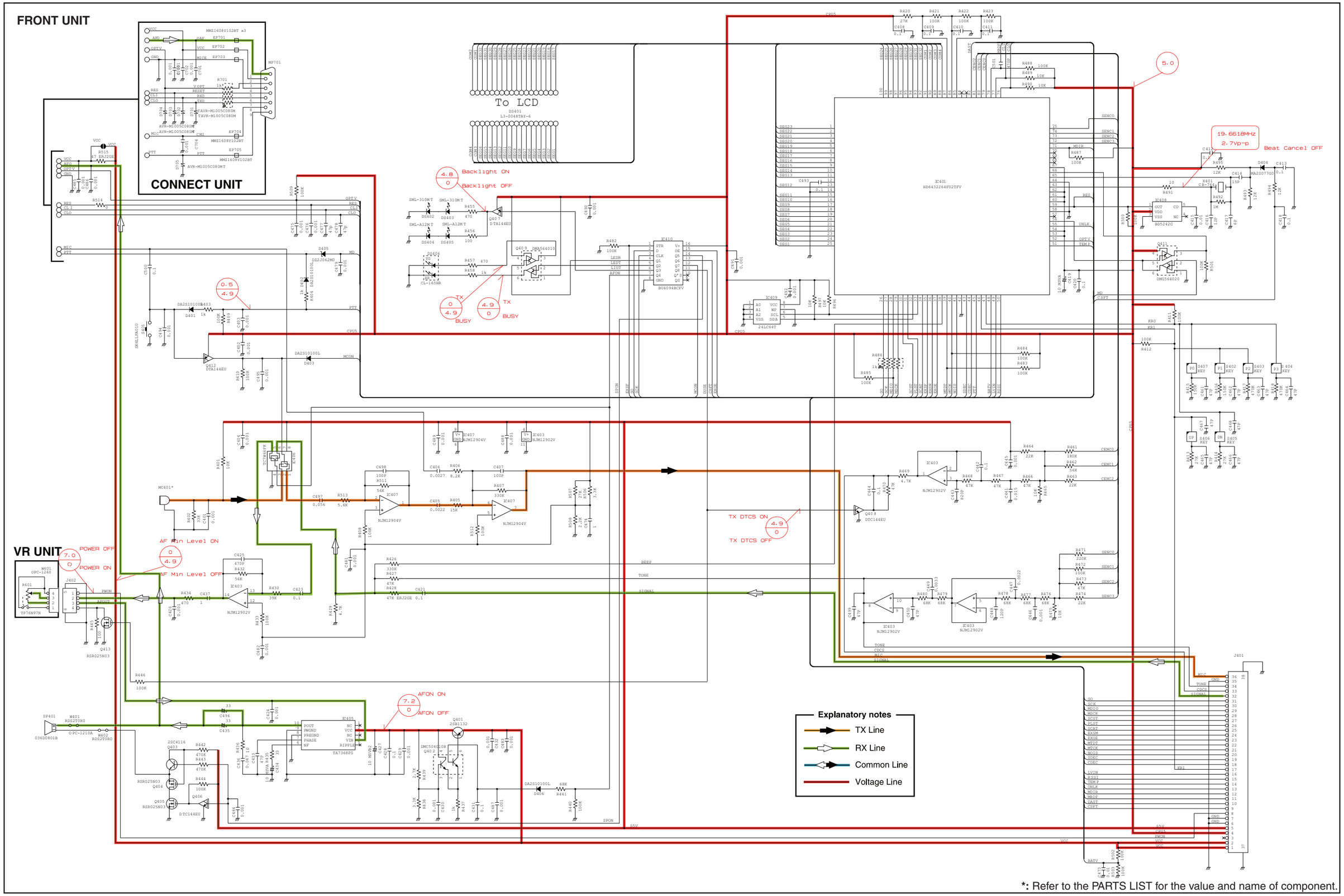

*: Refer to the PARTS LIST for the value and name of component.

MAIN UNIT

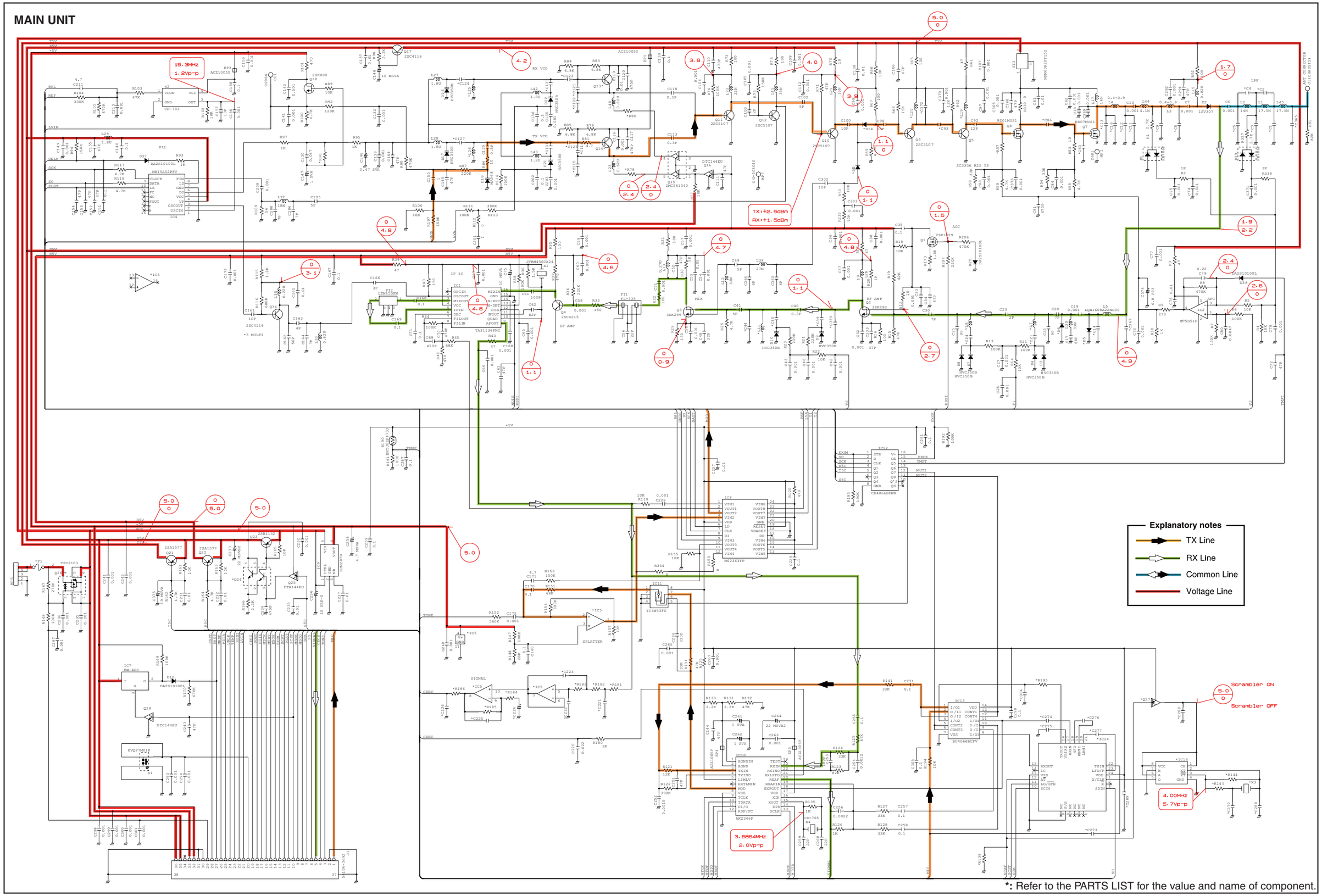

*: Refer to the PARTS LIST for the value and name of component.

MAIN-A (For IC-F61-L)

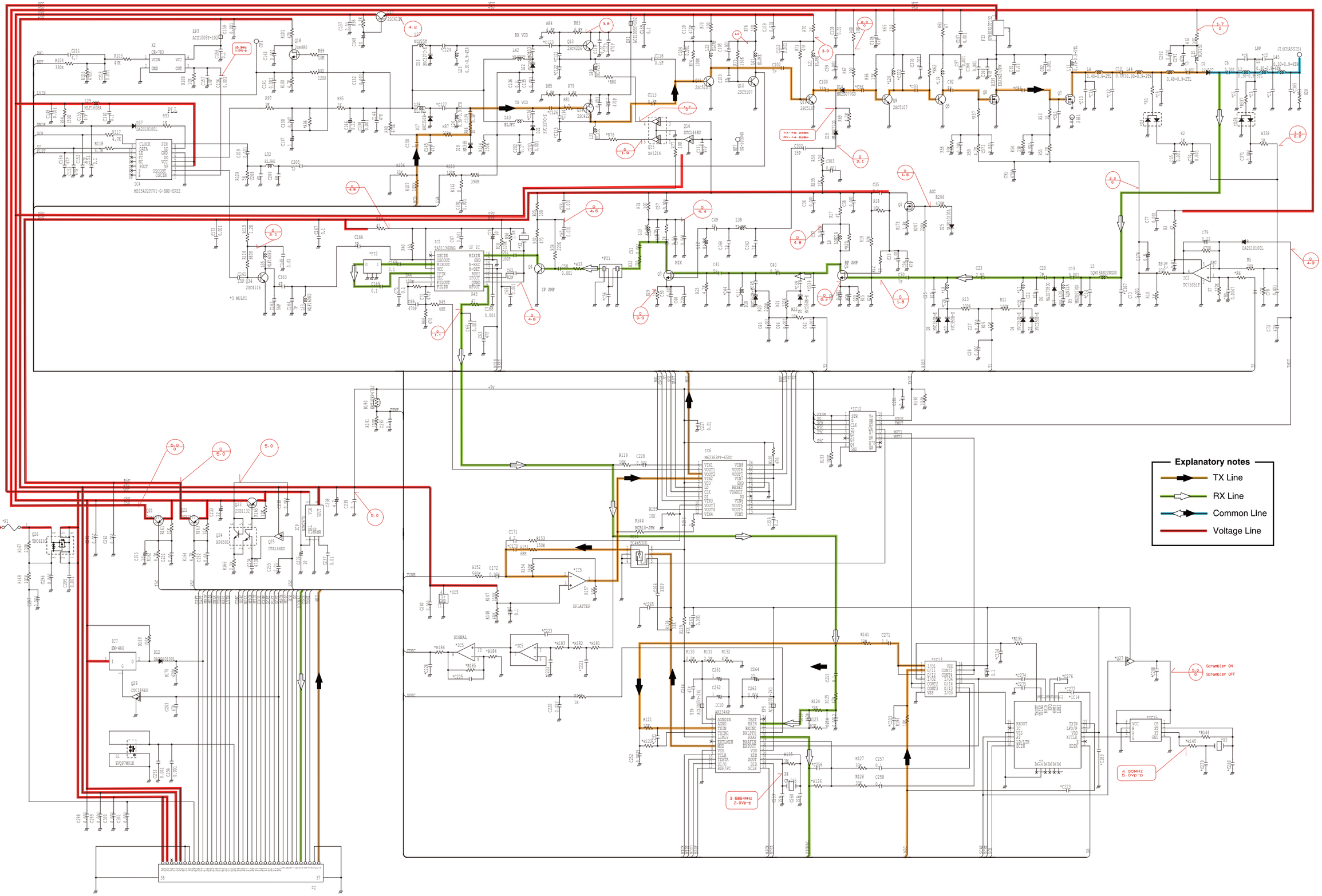

*: Refer to the PARTS LIST for the value and name of component.

Jan. 2008

SERVICE MANUAL ADDENDUM

IC-F61 (ATEX VERSION)

CONTENTS

PARTS LIST 1
BOARD LAYOUTS 6
BLOCK DIAGRAM 8
VOLTAGE DIAGRAM 9

PARTS LIST

[MAIN UNIT]

REF NO.	ORDER NO.	DESCRIPTION	M.	H/V LOCATION
IC1	1110003200	S.IC TA31136FN (EL)	B	13.6/8.1
IC2	1130008560	S.IC TC75S51F (TE85L)	T	52.3/17.1
IC4	1140005990	S.IC MB15A02PFV1-G-BND-ER	B	28.7/24.1
IC5	1110002751	S.IC TA75S01F F	T	30.4/9.7
IC6	1190000350	S.IC M62363FP-650C	T	19.7/8.9
IC7	1190001860	S.IC EW-460-FT	B	50.7/39.9
IC9	1110005350	S.IC NJM2870F05-TE1	T	73.7/28.5
IC10	1110006220	S.IC AK2346-E2	T	18.9/19.6
IC11	1130006220	S.IC TC4W53FU (TE12L)	T	25.2/25
IC12	1130007570	S.IC BU4094BCFV-E2	T	16.9/32.2
IC13	1130008090	S.IC BU4066BCFV-E1	T	22.7/32.2
IC14	1110004990	S.IC FX214LG/TR	B	9.8/32.5
IC15	1130007990	S.IC TC3W03FU (TE12L)	B	22.5/33.4
Q1	1560000840	S.FET 2SK1829 (TE85R)	T	46.4/10.8
Q2	1580000730	S.FET 3SK293 (TE85L)	T	47.3/8.2
Q3	1580000760	S.FET 3SK299-T1 U73	B	42/9.3
Q4	1530002600	S.TR 2SC4215-O (TE85R)	B	21.3/4.5
Q5	1530000371	S.TR 2SC3356-T1B S (R25)	B	53.5/30.6
Q7	1560001232	S.FET RD07MVS2	T	59.8/21.9
Q8	1560001240	S.FET RD01MUS1	T	60.2/28
Q9	1530003310	S.TR 2SC5107-O (TE85R)	B	53.2/24.4
Q10	1530003310	S.TR 2SC5107-O (TE85R)	B	48/23.2
Q11	1530003310	S.TR 2SC5107-O (TE85R)	B	46.1/26.6
Q12	1530003310	S.TR 2SC5107-O (TE85R)	B	48/31.9
Q13	1530002920	S.TR 2SC4226-T1 R25	B	42.4/29.1
Q14	1530002920	S.TR 2SC4226-T1 R25	B	43/24.3
Q15	1590001400	S.TR XP1214 (TX)	T	47.5/27.2
Q16	1590000430	S.TR DTC144EUA T106	T	47.2/29.9
Q17	1530002850	S.TR 2SC4116-BL (TE85R)	B	46.4/37.8
Q18	1560000540	S.FET 2SK880-Y (TE85R)	T	34.2/21.6
Q21	1510000920	S.TR 2SA1577 T106 Q	B	53/36.5
Q22	1510000920	S.TR 2SA1577 T106 Q	B	34.5/37.9
Q23	1520000450	S.TR 2SB1132 T100 Q	B	71.8/25.4
Q24	1590001190	S.TR XP6501-(TX) AB	B	72/29.2
Q25	1590000720	S.TR DTA144EUA T106	B	68.8/31.6
Q26	1590003320	S.FET TPC6103 (TE85L)	T	73.7/25.1
Q27	1590000720	S.TR DTA144EUA T106	B	19.5/34.5
Q29	1590000430	S.TR DTC144EUA T106	B	54.7/39.7
Q34	1530002850	S.TR 2SC4116-BL (TE85R)	B	25.6/17.8
D1	1790001670	S.DIO RB706F-40T106	T	57.3/10.4
D2	1750000580	S.DIO 1SV307 (TPH3)	B	59.9/9.1
D3	1750000710	S.VCP HVC350BTRF	T	60.2/3.6
D4	1750000710	S.VCP HVC350BTRF	T	60.2/4.9
D5	1790001260	S.DIO MA2S077-(TX)	B	57.1/4.8
D6	1790001240	S.DIO MA2S728-(TX)	T	60.7/7.2
D7	1750000710	S.VCP HVC350BTRF	T	50/3.6
D8	1750000710	S.VCP HVC350BTRF	T	50/4.9
D9	1750000710	S.VCP HVC350BTRF	T	44.4/4.6
D10	1750000710	S.VCP HVC350BTRF	T	41.2/4.6
D12	1790001250	S.DIO MA2S111-(TX)	B	45.9/40
D14	1790001260	S.DIO MA2S077-(TX)	B	52.5/22
D15	1790001260	S.DIO MA2S077-(TX)	B	51.4/19.8
D16	1750000710	S.VCP HVC350BTRF	B	37.1/32.8
D17	1750000710	S.VCP HVC350BTRF	B	37.1/20.6
D18	1720000570	S.VCP MA368 (TX)	B	36.6/25
D21	1750000710	S.VCP HVC350BTRF	B	39.4/25.6
D22	1750000710	S.VCP HVC350BTRF	B	38.9/28.9
D25	1790001250	S.DIO MA2S111-(TX)	T	42.8/9
D37	1790001250	S.DIO MA2S111-(TX)	B	31.5/30.1
D38	1790001250	S.DIO MA2S111-(TX)	T	52.5/14.8
D39	1790001670	S.DIO RB706F-40T106	T	63.9/10.4
FI1	2030000150	S.MLH FL-335 (46.350 MHz)	B	31.7/5.8
FI2	2020001840	CER ALFYM450F		
FI3	2040001440	S.LC NFE31PT152Z1E9L	B	71.8/21.2
X1	6070000190	S.DCR CDBCB450KCAY24-R0	T	11.5/9.1
X2	6050011940	S.XTL CR-783 (15.3 MHz)	B	27.8/33.6
X3	6050011560	S.XTL CR-746 (4.000 MHz)	B	22.8/39.7
X4	6050011730	S.XTL CR-765 (3.6864 MHz)	B	15.3/21.4
L1	6200008700	S.COL 0.30-0.9-6TR 17.5N	B	65.6/6.1
L2	6200013010	S.COL 0.30-0.9-5TL 10.3N	B	61.9/5.5
L3	6200009470	S.COL 0.40-0.9-2TL	B	62.2/11.2
L4	6200009470	S.COL 0.40-0.9-2TL	B	67.4/16.2
L5	6200010850	S.COL LQW18AN22NG00D	B	58/6.8
L7	6200007690	S.COL LQW2BHN18NJ01L	T	57/6.6
L8	6200007690	S.COL LQW2BHN18NJ01L	T	53.4/6.6
L9	6200007680	S.COL LQW2BHN12NJ01L	B	46.9/7.2
L11	6200007680	S.COL LQW2BHN12NJ01L	B	41.4/5.3
L12	6200005720	S.COL ELJRE 33NG-F	B	44/10.8
L13	6200003350	S.COL ELJNC R27K-F	B	38.8/11.5
L15	6200002850	S.COL NL 252018T-R82J	B	56.9/9.8
L17	6200013010	S.COL 0.30-0.9-5TL 10.3N	B	68.2/21.4

[MAIN UNIT]

REF NO.	ORDER NO.	DESCRIPTION	M.	H/V LOCATION
L19	6200005650	S.COL ELJRE 8N2Z-F	B	52.1/33.3
L20	6200005680	S.COL ELJRE 15NG-F	B	53.1/27.4
L21	6200005720	S.COL ELJRE 33NG-F	B	46.2/21.3
L22	6200005700	S.COL ELJRE 22NG-F	B	46.9/28.5
L23	6200002790	S.COL ELJFC R82M-F	T	43.6/23.3
L25	6200012970	S.COL 0.30-0.9-4TR 8.6N	B	37.8/31.1
L26	6200012390	S.COL 0.30-0.9-3TR .8N	B	37.8/22.3
L27	6200004950	S.COL NL 252018T-1R8J	T	37.5/31.1
L28	6200002940	S.COL ELJFC 1R2K-F	T	38.3/22.6
L29	6200004660	S.COL MLF1608A 1R8K-T	T	27.6/30
L30	6200007720	S.COL LQW2BHN33NJ01L	T	62.4/7
L32	6200005690	S.COL ELJRE 18NG-F	T	39/34.1
L33	6200004480	S.COL MLF1608D R82K-T	B	25.8/15.7
L35	6200003540	S.COL MLF1608D R22K-T	B	27.5/18
L38	6200005710	S.COL ELJRE 27NG-F	B	47.4/12
L40	6200002850	S.COL NL 252018T-R82J	T	43.9/28.1
L41	6200005720	S.COL ELJRE 33NG-F	B	46.1/32
L42	6200004950	S.COL NL 252018T-1R8J	T	40/30.3
L43	6200002940	S.COL ELJFC 1R2K-F	T	39.3/26.1
L44	6200012940	S.COL 0.30-0.9-2TR 2.5N	B	64.3/12.3
L45	6200008700	S.COL 0.30-0.9-6TR 17.5N	B	68.3/8.1
R1	7030003490	S.RES ERJ3GEYJ 272 V (2.7 kΩ)	B	59.7/11.4
R2	7030005120	S.RES ERJ2GEJ 102 X (1 kΩ)	T	59.1/10
R3	7030004970	S.RES ERJ2GEJ 470 X (47 Ω)	T	52/19.8
R4	7030005050	S.RES ERJ2GEJ 103 X (10 kΩ)	T	55.5/10
R5	7030005050	S.RES ERJ2GEJ 103 X (10 kΩ)	T	54.5/14.8
R6	7030005090	S.RES ERJ2GEJ 104 X (100 kΩ)	T	47.8/16
R7	7030005310	S.RES ERJ2GEJ 124 X (120 kΩ)	T	49.1/16.5
R8	7030005170	S.RES ERJ2GEJ 474 X (470 kΩ)	T	54.5/16.6
R9	7030008280	S.RES ERJ2GEJ 271 X (270 Ω)	T	53.6/19.8
R10	7030005120	S.RES ERJ2GEJ 102 X (1 kΩ)	T	54.1/21.7
R11	7030005090	S.RES ERJ2GEJ 104 X (100 kΩ)	T	57.1/3.5
R12	7030005530	S.RES ERJ2GEJ 100 X (10 Ω)	T	48.3/10.3
R13	7030005090	S.RES ERJ2GEJ 104 X (100 kΩ)	T	53.3/3.5
R14	7030005050	S.RES ERJ2GEJ 103 X (10 kΩ)	T	54.7/4
R15	7030005240	S.RES ERJ2GEJ 473 X (47 kΩ)	T	48.3/5.9
R16	7030004980	S.RES ERJ2GEJ 101 X (100 Ω)	T	46.9/4.4
R17	7030004970	S.RES ERJ2GEJ 470 X (47 Ω)	B	48.4/7.2
R18	7030005050	S.RES ERJ2GEJ 103 X (10 kΩ)	T	50.1/8.5
R19	7030005080	S.RES ERJ2GEJ 823 X (82 kΩ)	T	49.1/7.7
R20	7030005240	S.RES ERJ2GEJ 102 X (1 kΩ)	B	45.4/7.2
R21	7030005110	S.RES ERJ2GEJ 224 X (220 kΩ)	T	43.2/5.8
R22	7030005050	S.RES ERJ2GEJ 103 X (10 kΩ)	T	38.7/5.3
R23	7030005110	S.RES ERJ2GEJ 224 X (220 kΩ)	T	40/5.8
R25	7030005040	S.RES ERJ2GEJ 472 X (4.7 kΩ)	B	43.9/7.2
R29	7030007270	S.RES ERJ2GEJ 151 X (150 Ω)	B	41.5/13.1
R30	7030005120	S.RES ERJ2GEJ 102 X (1 kΩ)	B	39.5/8.7
R31	7030004980	S.RES ERJ2GEJ 101 X (100 Ω)	B	36.7/11.5
R32	7030004980	S.RES ERJ2GEJ 101 X (100 Ω)	B	37.7/7.7
R33	7030007270	S.RES ERJ2GEJ 151 X (150 Ω)	B	25.4/4.1
R34	7030005110	S.RES ERJ2GEJ 224 X (220 kΩ)	B	23.1/5.9
R35	7030004980	S.RES ERJ2GEJ 101 X (100 Ω)	B	22.3/7.9
R36	7030005030	S.RES ERJ2GEJ 152 X (1.5 kΩ)	T	13.5/13.6
R37	7030005000	S.RES ERJ2GEJ 471 X (470 Ω)	B	21.8/6.4
R38	7030005090	S.RES ERJ2GEJ 104 X (100 kΩ)	B	20.2/7.6
R39	7030004970	S.RES ERJ2GEJ 470 X (47 Ω)	B	7.7/6.8
R40	7030007270	S.RES ERJ2GEJ 151 X (150 Ω)	B	8.7/6.8
R43	7030004970	S.RES ERJ2GEJ 470 X (47 Ω)	B	17.4/11.1
R44	7030005090	S.RES ERJ2GEJ 104 X (100 kΩ)	B	11.6/11.4
R45	7030005070	S.RES ERJ2GEJ 683 X (68 kΩ)	B	14.4/13.2
R46	7030005000	S.RES ERJ2GEJ 471 X (470 Ω)	B	13.1/12.7
R50	7030004980	S.RES ERJ2GEJ 101 X (100 Ω)	B	49.6/14.3
R51	7030003670	S.RES ERJ3GEYJ 823 V (82 kΩ)	B	69.9/10.4
R52	7030004980	S.RES ERJ2GEJ 101 X (100 Ω)	B	54.2/9.4
R53	7030005530	S.RES ERJ2GEJ 100 X (10 Ω)	T	55.6/24.2
R54	7030005060	S.RES ERJ2GEJ 333 X (33 kΩ)	T	55.1/25.5
R55	7030005040	S.RES ERJ2GEJ 472 X (4.7 kΩ)	T	53.6/26
R57	7030008280	S.RES ERJ2GEJ 271 X (270 Ω)	T	55.8/30
R58	7030005060	S.RES ERJ2GEJ 333 X (33 kΩ)	T	53.1/31.4
R59	7030005040	S.RES ERJ2GEJ 472 X (4.7 kΩ)	T	52.3/26.5
R61	7030004970	S.RES ERJ2GEJ 470 X (47 Ω)	B	51.2/30.6
R62	7030008010	S.RES ERJ2GEJ 123 X (12 kΩ)	B	54.8/32.6
R65	7030004980	S.RES ERJ2GEJ 101 X (100 Ω)	B	51.2/28.1
R66	7030007340	S.RES ERJ2GEJ 153 X (15 kΩ)	B	51.2/24.9
R67	7030004980	S.RES ERJ2GEJ 101 X (100 Ω)	B	53.7/22.3
R68	7030005050	S.RES ERJ2GEJ 103 X (10 kΩ)	B	53.7/20.5
R69	7030005040	S.RES ERJ2GEJ 472 X (4.7 kΩ)	T	49.7/20.3
R70	7030005530	S.RES ERJ2GEJ 100 X (10 Ω)	B	45.9/24.5
R71	7030005240	S.RES ERJ2GEJ 473 X (47 kΩ)	B	45.9/23.5
R73	7030004980	S.RES ERJ2GEJ 101 X (100 Ω)	B	44.5/30
R74	7030005090	S.RES ERJ2GEJ 104 X (100 kΩ)	B	44.2/28.7
R75	7030005100	S.RES ERJ2GEJ 154 X (150 kΩ)	B	48.1/30
R76	7030004980	S.RES ERJ2GEJ 101 X (100 Ω)	B	44.9/31.3
R77	7030005050	S.RES ERJ2GEJ 103 X (10 kΩ)	T	48.1/32
R78	7030005010	S.RES ERJ2GEJ 681 X (680 Ω)	T	46.3/23.8
R79	7030006020	S.RES RR0510P-682-D (6.8 kΩ)	B	40.8/22.9
R80	7030005120	S.RES ERJ2GEJ 102 X (1 kΩ)	T	45.4/26.3
R81	7030009320	S.RES ERJ2GEJ 4R7 X (4.7 Ω)	B	43.4/21.9
R83	7030006020	S.RES RR0510P-682-D (6.8 kΩ)	B	40.6/30.5
R84	7030006020	S.RES RR0510P-682-D (6.8 kΩ)	B	42.2/32.3

M.=Mounted side (T: Mounted on the Top side, B: Mounted on the Bottom side)
S.=Surface mount

[MAIN UNIT]

REF NO.	ORDER NO.	DESCRIPTION	M.	H/V LOCATION
R85	7030006020	S.RES RR0510P-682-D (6.8 kΩ)	B	42.4/21.1
R86	7030005530	S.RES ERJ2GEJ 100 X (10 Ω)	B	38/25.1
R87	7030005110	S.RES ERJ2GEJ 224 X (220 kΩ)	T	37/24.9
R89	7030005050	S.RES ERJ2GEJ 103 X (10 kΩ)	T	33.9/23.5
R90	7030005170	S.RES ERJ2GEJ 474 X (470 kΩ)	T	32.5/17.2
R92	7030005310	S.RES ERJ2GEJ 124 X (120 kΩ)	T	33/18.5
R93	7030005120	S.RES ERJ2GEJ 102 X (1 kΩ)	B	31/28.4
R94	7030005100	S.RES ERJ2GEJ 154 X (150 kΩ)	B	30.3/30.5
R95	7030005120	S.RES ERJ2GEJ 102 X (1 kΩ)	T	36/24.9
R96	7030009140	S.RES ERJ2GEJ 272 X (2.7 kΩ)	T	32.6/23.6
R97	7030005120	S.RES ERJ2GEJ 102 X (1 kΩ)	T	31.9/24.9
R98	7030007290	S.RES ERJ2GEJ 222 X (2.2 kΩ)	B	44.6/38.2
R100	7030005040	S.RES ERJ2GEJ 472 X (4.7 kΩ)	B	32.7/21.6
R101	7030005000	S.RES ERJ2GEJ 471 X (470 Ω)	T	32.1/22.3
R107	7030005090	S.RES ERJ2GEJ 104 X (100 kΩ)	T	26.7/15
R108	7030005050	S.RES ERJ2GEJ 103 X (10 kΩ)	B	26.7/30
R109	7030005580	S.RES ERJ2GEJ 560 X (56 Ω)	T	37.2/33.8
R111	7030005090	S.RES ERJ2GEJ 104 X (100 kΩ)	T	36.4/20.4
R113	7030006610	S.RES ERJ2GEJ 394 X (390 kΩ)	T	39.3/28.2
R114	7030005100	S.RES ERJ2GEJ 154 X (150 kΩ)	B	38.2/26.9
R115	7030007570	S.RES ERJ2GEJ 122 X (1.2 kΩ)	B	27/19.8
R116	7030007060	S.RES ERJ2GEJ 684X (680 kΩ)	B	25.2/19.8
R117	7030005040	S.RES ERJ2GEJ 472 X (4.7 kΩ)	B	31.7/19.3
R118	7030005040	S.RES ERJ2GEJ 472 X (4.7 kΩ)	B	30.7/19.3
R119	7030005050	S.RES ERJ2GEJ 103 X (10 kΩ)	B	18.9/12.6
R120	7030005000	S.RES ERJ2GEJ 471 X (470 Ω)	T	24.7/13.6
R121	7030008010	S.RES ERJ2GEJ 123 X (12 kΩ)	T	25.8/17.5
R122	7030006610	S.RES ERJ2GEJ 394 X (390 kΩ)	T	25.3/18.8
R123	7030005080	S.RES ERJ2GEJ 823 X (82 kΩ)	T	13/16.7
R124	7030005060	S.RES ERJ2GEJ 333 X (33 kΩ)	T	13.5/15.4
R125	7030005240	S.RES ERJ2GEJ 473 X (47 kΩ)	T	16.1/14.8
R126	7030005160	S.RES ERJ2GEJ 105 X (1 MΩ)	T	14/18.5
R127	7030005060	S.RES ERJ2GEJ 333 X (33 kΩ)	T	20.8/24.8
R128	7030005060	S.RES ERJ2GEJ 333 X (33 kΩ)	T	21.8/24.8
R129	7030005840	S.RES RR0510R-473-D (47 kΩ)	B	22/13.9
R130	7030006000	S.RES RR0510P-222-D (2.2 kΩ)	B	22.2/19.2
R131	7030006000	S.RES RR0510P-222-D (2.2 kΩ)	B	22.9/21.5
R132	7030005840	S.RES RR0510R-473-D (47 kΩ)	B	23.4/22.8
R134	7030005060	S.RES ERJ2GEJ 333 X (33 kΩ)	T	25.6/20.6
R135	7030005160	S.RES ERJ2GEJ 105 X (1 MΩ)	T	14/21.8
R141	7030005060	S.RES ERJ2GEJ 333 X (33 kΩ)	T	26.5/32.2
R144	7030005160	S.RES ERJ2GEJ 105 X (1 MΩ)	B	22.5/36.5
R145	7030005530	S.RES ERJ2GEJ 100 X (10 Ω)	B	24.3/36.5
R147	7030005090	S.RES ERJ2GEJ 104 X (100 kΩ)	B	28/10
R148	7030005070	S.RES ERJ2GEJ 683 X (68 kΩ)	B	26.7/9.5
R151	7030005070	S.RES ERJ2GEJ 683 X (68 kΩ)	T	26.5/6.7
R152	7030008310	S.RES ERJ2GEJ 564 X (560 kΩ)	T	18/3.1
R153	7030005100	S.RES ERJ2GEJ 154 X (150 kΩ)	T	21.6/3.1
R155	7030005050	S.RES ERJ2GEJ 103 X (10 kΩ)	T	19.8/3.1
R157	7030005050	S.RES ERJ2GEJ 103 X (10 kΩ)	T	26.5/10.3
R161	7030005050	S.RES ERJ2GEJ 103 X (10 kΩ)	B	51.1/36.5
R162	7030005040	S.RES ERJ2GEJ 472 X (4.7 kΩ)	B	49.3/36
R163	7030005050	S.RES ERJ2GEJ 103 X (10 kΩ)	B	34.5/39.8
R164	7030005040	S.RES ERJ2GEJ 472 X (4.7 kΩ)	B	32.7/38.4
R165	7030005050	S.RES ERJ2GEJ 103 X (10 kΩ)	B	74.6/28.5
R166	7030007290	S.RES ERJ2GEJ 222 X (2.2 kΩ)	B	69.6/28.8
R167	7030005700	S.RES ERJ2GEJ 274 X (270 kΩ)	T	75.9/24.6
R168	7030005090	S.RES ERJ2GEJ 104 X (100 kΩ)	T	75.9/22.8
R169	7030005090	S.RES ERJ2GEJ 104 X (100 kΩ)	B	47.7/40.7
R170	7030005170	S.RES ERJ2GEJ 474 X (470 kΩ)	B	46.3/41.2
R173	7030008400	S.RES ERJ2GEJ 182 X (1.8 kΩ)	T	44.5/9.7
R180	7030005120	S.RES ERJ2GEJ 102 X (1 kΩ)	B	5.8/22.9
R190	7510001730	S.TMR ERTJOEP 473J	B	30.9/33.3
R191	7030010080	S.RES ERJ2RHD 104 X (100 kΩ)	B	32.7/33.3
R192	7030005090	S.RES ERJ2GEJ 104 X (100 kΩ)	T	13.6/32.5
R193	7030005090	S.RES ERJ2GEJ 104 X (100 kΩ)	T	13.6/30
R194	7030005050	S.RES ERJ2GEJ 103 X (10 kΩ)	T	22.6/37.5
R195	7030005050	S.RES ERJ2GEJ 103 X (10 kΩ)	T	17.7/37.4
R206	7030005170	S.RES ERJ2GEJ 474 X (470 kΩ)	T	43/10.2
R207	7030005110	S.RES ERJ2GEJ 224 X (220 kΩ)	T	44/11.2
R235	7030005050	S.RES ERJ2GEJ 103 X (10 kΩ)	B	49.6/12.5
R337	7030003490	S.RES ERJ3GEYJ 272 V (2.7 kΩ)	B	63.9/6.9
R338	7030005120	S.RES ERJ2GEJ 102 X (1 kΩ)	T	61.1/10.8
R339	7030003860	S.RES ERJ3GE JPW V	T	65.5/26.4
R344	7030000010	S.RES ERJ3GE JPW V	T	45.3/18.1
C1	4030006990	S.CER C1608 CH 1H 080D-T	B	67.3/10.4
C2	4030009560	S.CER C1608 CH 1H R75B-T	B	67.3/5.8
C3	4030006980	S.CER C1608 CH 1H 070D-T	B	63.9/4.3
C4	4030009550	S.CER C1608 CH 1H 2R5B-T	B	61.9/7.2
C5	4030009530	S.CER C1608 CH 1H 030B-T	B	59.8/4.3
C6	4030017460	S.CER ECJ0EB1E102K	B	59.8/6.5
C7	4030017460	S.CER ECJ0EB1E102K	B	61.7/9.7
C8	4030009910	S.CER C1608 CH 1H 040B-T	B	64.6/10.4
C9	4030009510	S.CER C1608 CH 1H 010B-T	B	61.1/12.8
C10	4030017460	S.CER ECJ0EB1E102K	B	66.3/13
C11	4030011770	S.CER C1608 CH 1H 060B-T	B	67/14.4
C13	4030007040	S.CER C1608 CH 1H 180J-T	B	67/18
C14	4030017360	S.CER ECJ0EC1H030B	B	55.8/6.8
C15	4030017460	S.CER ECJ0EB1E102K	T	60.6/9.5
C16	4030007050	S.CER C1608 CH 1H 220J-T	B	66.2/22.5
C17	4030017510	S.CER ECJ0EC1H680J	T	62.4/4.9
C18	4030006860	S.CER C1608 JB 1H 102K-T	T	55.3/20
C19	4030017460	S.CER ECJ0EB1E102K	B	57.5/8
C20	4030017590	S.CER ECJ0EC1H070C	T	59.5/7.5
C21	4030017390	S.CER ECJ0EC1H180J	T	57.1/4.5
C22	4030017610	S.CER ECJ0EC1H090C	T	58.5/6.5

[MAIN UNIT]

REF NO.	ORDER NO.	DESCRIPTION	M.	H/V LOCATION
C23	4030017350	S.CER ECJ0EC1H020B	T	55.2/7.6
C24	4030017390	S.CER ECJ0EC1H180J	T	53.3/4.5
C25	4030017610	S.CER ECJ0EC1H090C	T	51.9/6.7
C27	4030017460	S.CER ECJ0EB1E102K	T	55.7/4
C28	4030017460	S.CER ECJ0EB1E102K	B	54.7/4
C30	4030017590	S.CER ECJ0EC1H070C	T	50.6/7.2
C32	4030017460	S.CER ECJ0EB1E102K	T	46.9/6.4
C33	4030017460	S.CER ECJ0EB1E102K	T	49.3/10.3
C34	4030017420	S.CER ECJ0EC1H470J	T	50.3/10.3
C35	4030016930	S.CER ECJ0EB1A104K	T	51.1/8.5
C36	4030017460	S.CER ECJ0EB1E102K	B	50.1/11.2
C37	4030017460	S.CER ECJ0EB1E102K	B	45.4/5.4
C38	4030017460	S.CER ECJ0EB1E102K	B	49.4/7.2
C39	4030017620	S.CER ECJ0EC1H100C	T	44.4/6.8
C40	4030017520	S.CER ECJ0EC1H0R3B	T	43.1/7.3
C41	4030017380	S.CER ECJ0EC1H050B	B	42.9/7.2
C42	4030017460	S.CER ECJ0EB1E102K	T	39/4
C43	4030017460	S.CER ECJ0EB1E102K	T	43.2/4
C44	4030017550	S.CER ECJ0EC1H1R5B	B	42.9/5.4
C45	4030017620	S.CER ECJ0EC1H100C	T	41.2/6.8
C46	4030017460	S.CER ECJ0EB1E102K	T	40/4
C48	4030017400	S.CER ECJ0EC1H220J	B	41.5/11.1
C49	4030017380	S.CER ECJ0EC1H050B	B	45.5/9.9
C50	4030017460	S.CER ECJ0EB1E102K	B	41.5/12.1
C51	4030017460	S.CER ECJ0EB1E102K	B	39.5/7.7
C52	4030017420	S.CER ECJ0EC1H470J	B	39.5/9.7
C53	4030016790	S.CER ECJ0EB1C103K	B	37.7/8.7
C54	4030017460	S.CER ECJ0EB1E102K	B	37.7/9.7
C56	4030017400	S.CER ECJ0EC1H220J	B	33.3/9.1
C57	4030017460	S.CER ECJ0EB1E102K	B	35.3/11.5
C58	4030017460	S.CER ECJ0EB1E102K	B	23.6/4.1
C59	4030017460	S.CER ECJ0EB1E102K	B	23.6/8.4
C60	4030017460	S.CER ECJ0EB1E102K	B	23.6/7.4
C61	4030017430	S.CER ECJ0EC1H101J	B	19.2/5.4
C62	4030017680	S.CER ECJ0EC1H820J	B	17.9/9.7
C63	4030017420	S.CER ECJ0EC1H470J	B	18.9/7.1
C65	4030017460	S.CER ECJ0EB1E102K	B	18.4/8.4
C66	4030017460	S.CER ECJ0EB1E102K	B	18.9/10.2
C67	4030017460	S.CER ECJ0EB1E102K	B	6.4/7.3
C69	4030017730	S.CER ECJ0EB1E471K	B	12.1/12.7
C70	4030017730	S.CER ECJ0EB1E471K	B	11.1/12.7
C71	4030016930	S.CER ECJ0EB1A104K	B	9.8/11.6
C72	4030017420	S.CER ECJ0EC1H470J	B	51/16
C73	4030017460	S.CER ECJ0EB1E102K	T	54.1/22.7
C74	4030017460	S.CER ECJ0EB1E102K	T	60.1/10.8
C75	4550006050	S.TAN TEESVA 0J 106M8L	B	9.6/16
C76	4030016790	S.CER ECJ0EB1C103K	T	50.1/18.3
C77	4030017460	S.CER ECJ0EB1E102K	B	53.2/11.5
C78	4030017460	S.CER ECJ0EB1E102K	T	56.4/14.3
C79	4030011810	S.CER C1608 JB 1A 224K-T	T	55.7/16
C80	4030017780	S.CER ECJ0EB1E472K	T	50.1/16.5
C81	4030016790	S.CER ECJ0EB1C103K	T	67.4/21.8
C82	4030017460	S.CER ECJ0EB1E102K	B	69.2/23.2
C83	4030017390	S.CER ECJ0EC1H180J	T	56.1/25.5
C84	4030017460	S.CER ECJ0EB1E102K	T	54.1/24.7
C86	4030017400	S.CER ECJ0EC1H220J	T	57.1/25.5
C88	4030017460	S.CER ECJ0EB1E102K	T	52.3/28.8
C91	4030017730	S.CER ECJ0EB1E471K	T	52.8/24.2
C92	4030017630	S.CER ECJ0EC1H120J	T	55.8/31
C93	4030017600	S.CER ECJ0EC1H080C	B	54.8/27.1
C97	4030017460	S.CER ECJ0EB1E102K	B	51.7/32.1
C98	4030017380	S.CER ECJ0EC1H050C	B	51.2/23.1
C99	4030017460	S.CER ECJ0EB1E102K	B	54.7/22.3
C100	4030017620	S.CER ECJ0EC1H100C	T	49.7/21.3
C102	4030017380	S.CER ECJ0EC1H050B	B	48/26.4
C103	4030017350	S.CER ECJ0EC1H020B	B	48.6/28.2
C104	4030017460	S.CER ECJ0EB1E102K	B	45.2/28.7
C105	4030017460	S.CER ECJ0EB1E102K	B	46.3/30
C106	4030017420	S.CER ECJ0EC1H470J	T	50.8/30.1
C107	4030017460	S.CER ECJ0EB1E102K	T	52.4/35.2
C108	4030016790	S.CER ECJ0EB1C103K	B	54.2/19.2
C109	4030017460	S.CER ECJ0EB1E102K	T	43.4/26.3
C110	4030017730	S.CER ECJ0EB1E471K	T	43.1/30.7
C111	4030017420	S.CER ECJ0EC1H470J	T	45.3/30.2
C112	4030017460	S.CER ECJ0EB1E102K	B	45.9/22.5
C113	4030017520	S.CER ECJ0EC1H0R3B	B	43.7/26.2
C114	4030017380	S.CER ECJ0EC1H050B	B	42.1/22.4
C115	4030017570	S.CER ECJ0EC1H040B	B	40.9/24.2
C116	4030017460	S.CER ECJ0EB1E102K	B	40.9/25.2
C117	4030017730	S.CER ECJ0EB1E471K	B	41.6/26.2
C118	4030017530	S.CER ECJ0EC1H0R5B	B	43.7/27.2
C119	4030016790	S.CER ECJ0EB1C103K	B	41.6/27.2
C120	4030017730	S.CER ECJ0EB1E471K	B	40.6/28.6
C121	4030017380	S.CER ECJ0EC1H050B	B	42.1/31
C120	4030017570	S.CER ECJ0EC1H040B	B	43.2/32.3
C123	4030017640	S.CER ECJ0EC1H150J	B	40.9/32
C124	4030017380	S.CER ECJ0EC1H050B	B	39.6/32.3
C126	4030017640	S.CER ECJ0EC1H150J	B	40.9/21.4
C127	4030017580	S.CER ECJ0EC1H060C	B	39.6/21.1
C129	4030017530	S.CER ECJ0EC1H0R5B	B	38.3/23.8
C130	4030016950	S.CER ECJ0EB1A473K	T	31.6/23.6
C132	4030017460	S.CER ECJ0EB1E102K	T	31.4/19.3
C133	4030017630	S.CER ECJ0EC1H120J	B	39.6/30.5
C134	4030017630	S.CER ECJ0EC1H120J	B	39.6/22.9
C135	4030017460	S.CER ECJ0EB1E102K	B	36.7/28.6
C136	4030016930	S.CER ECJ0EB1A104K	B	36.7/29.6
C137	4030016790	S.CER ECJ0EB1C103K	B	44.1/36.9
C138	4030017460	S.CER ECJ0EB1E102K	T	37.1/29

M.=Mounted side (T: Mounted on the Top side, B: Mounted on the Bottom side)
S.=Surface mount

[MAIN UNIT]

REF NO.	ORDER NO.	DESCRIPTION	M.	H/V LOCATION
C139	4030016930	S.CER ECJ0EB1A104K	T	46.3/34.2
C140	4030016930	S.CER ECJ0EB1A104K	B	28.5/28.4
C141	4030017460	S.CER ECJ0EB1E102K	B	32.7/20.6
C143	4030017460	S.CER ECJ0EB1E102K	T	32.1/21.3
C144	4030017420	S.CER ECJ0EC1H470J	T	36.8/27.3
C145	4030017420	S.CER ECJ0EC1H470J	T	36.2/22.9
C146	4550000550	S.TAN TEESVA 1E 224M8L	T	35.2/30.3
C147	4550000460	S.TAN TEESVA 1C 105M8L	T	30/25.9
C148	4550006250	S.TAN TEESVA 1A 106M8L	B	43/40.3
C149	4030017460	S.CER ECJ0EB1E102K	T	28.4/28.5
C150	4030017490	S.CER C1608 JB 1A 105K-T	T	30.2/16.8
C151	4030016930	S.CER ECJ0EB1A104K	B	28.9/30
C152	4030017420	S.CER ECJ0EC1H470J	B	31.7/16.9
C153	4030017420	S.CER ECJ0EC1H470J	B	30.7/16.9
C154	4030017420	S.CER ECJ0EC1H470J	B	29.7/18.5
C155	4030017420	S.CER ECJ0EC1H470J	T	28.4/31.5
C156	4030017460	S.CER ECJ0EB1E102K	B	25.3/27.5
C157	4030017620	S.CER ECJ0EC1H100C	B	25.7/29
C158	4030016930	S.CER ECJ0EB1A104K	B	24.8/35.2
C159	4030017460	S.CER ECJ0EB1E102K	B	24.8/31
C161	4030017620	S.CER ECJ0EC1H100C	B	25.3/23.8
C162	4030017500	S.CER ECJ0EC1H560J	B	29.2/17.2
C163	4030017570	S.CER ECJ0EC1H040B	B	27.5/15.8
C164	4030017590	S.CER ECJ0EC1H070C	B	26.2/14.5
C165	4030016790	S.CER ECJ0EB1C103K	B	28.7/18.5
C166	4030017360	S.CER ECJ0EC1H030B	B	27.5/14
C167	4030016930	S.CER ECJ0EB1A104K	B	6.4/6.3
C168	4030016930	S.CER ECJ0EB1A104K	B	8.8/5.5
C169	4030016930	S.CER ECJ0EB1A104K	B	8.8/8.1
C170	4030016930	S.CER ECJ0EB1A104K	T	25.7/4.9
C171	4030018560	S.CER C2012 JB 1A 475K-T	T	24.4/3.2
C172	4030017460	S.CER ECJ0EB1E102K	T	26.5/3.1
C173	4030017460	S.CER ECJ0EB1E102K	T	28.2/18.3
C180	4030016930	S.CER ECJ0EB1A104K	B	26.7/10.5
C188	4030017460	S.CER ECJ0EB1E102K	B	17.9/6.6
C201	4030017490	S.CER ECJ0EB1A105K	B	36.9/27.6
C202	4030016930	S.CER ECJ0EB1A104K	B	36.9/27.6
C203	4030017460	S.CER ECJ0EB1E102K	B	39.8/27.3
C205	4030017380	S.CER ECJ0EC1H050B	T	44.1/32.8
C206	4030017590	S.CER ECJ0EC1H070C	T	40.8/33.3
C208	4030017590	S.CER ECJ0EC1H070C	T	36.2/33.8
C209	4030017460	S.CER ECJ0EB1E102K	T	35.2/33.8
C211	4030018560	S.CER C2012 JB 1A 475K-T	B	16.5/4
C220	4030016970	S.CER ECJ0EB1C223K	B	5.3/24.2
C224	4550000460	S.TAN TEESVA 1C 105M8L	B	30.6/14.6
C227	4030016790	S.CER ECJ0EB1C103K	B	23.3/12.9
C228	4030017460	S.CER ECJ0EB1E102K	B	18.4/13.9
C229	4030016930	S.CER ECJ0EB1A104K	T	24.7/10.3
C230	4030017460	S.CER ECJ0EB1E102K	T	67.4/28.3
C231	4030016790	S.CER ECJ0EB1C103K	B	52.4/34.7
C232	4030016790	S.CER ECJ0EB1C103K	B	32.7/40.2
C233	4550006350	S.TAN TEESVB2 1A 226M8L	B	67.1/27.2
C234	4030017730	S.CER ECJ0EF1C471Z	B	69.6/29.8
C235	4030016790	S.CER ECJ0EB1C103K	B	66.9/31
C236	4510004630	S.ELE ECEV1CA100SR	T	72.5/20.4
C237	4030016790	S.CER ECJ0EB1C103K	T	75.9/29.1
C238	4550006480	S.TAN TEESVA 1C 475M8L	B	66.5/35.1
C239	4030017330	S.CER ECJ0EF1C104Z	T	71.5/29
C240	4030017460	S.CER ECJ0EB1E102K	B	29.6/11
C241	4030017460	S.CER ECJ0EB1E102K	T	51.6/37.6
C242	4030017460	S.CER ECJ0EB1E102K	B	34.6/36
C243	4030017420	S.CER ECJ0EC1H470J	B	53.5/41.5
C244	4030017420	S.CER ECJ0EC1H470J	B	22.2/20.2
C251	4030017420	S.CER ECJ0EC1H470J	T	24.8/17.5
C252	4030017910	S.CER ECJ0EB1H152K	T	26.5/31.2
C253	4030017710	S.CER ECJ0EC1H181J	T	14/16.7
C254	4030017750	S.CER ECJ0EB1E122K	T	14.8/14.6
C255	4030016930	S.CER ECJ0EB1A104K	B	17.4/12.1
C256	4030017760	S.CER ECJ0EB1H222K	T	13/18.5
C257	4030016930	S.CER ECJ0EB1A104K	T	20.8/26.6
C258	4030016930	S.CER ECJ0EB1A104K	T	21.8/26.6
C259	4030017400	S.CER ECJ0EC1H220J	B	9/23.1
C260	4030017400	S.CER ECJ0EC1H220J	B	22.1/23.1
C261	4550000460	S.TAN TEESVA 1C 105M8L	B	20.8/17.6
C262	4550000460	S.TAN TEESVA 1C 105M8L	B	20.8/15.5
C263	4030017460	S.CER ECJ0EB1E102K	T	13/21.1
C264	4550006350	S.TAN TEESVB2 1A 226M8L	B	14.2/17.1
C265	4030017460	S.CER ECJ0EB1E102K	T	26.1/21.9
C266	4030017720	S.CER ECJ0EB1H331K	T	24.6/20.6
C267	4030017460	S.CER ECJ0EB1E102K	B	22/12.9
C271	4030016930	S.CER ECJ0EB1A104K	T	26/33.5
C273	4030016930	S.CER ECJ0EB1A104K	B	16.5/37.2
C274	4030016930	S.CER ECJ0EB1A104K	B	17.1/26.7
C275	4030017490	S.CER C1608 JB 1A 105K-T	B	6.9/41.6
C276	4030017490	S.CER C1608 JB 1A 105K-T	B	11.1/41.6
C277	4030017490	S.CER C1608 JB 1A 105K-T	B	14.2/39.9
C279	4030017650	S.CER ECJ0EC1H270J]	B	29.1/41.4
C280	4030017650	S.CER ECJ0EC1H270J	B	16.5/41.4
C281	4030016930	S.CER ECJ0EB1A104K	T	13.6/34.3
C287	4030016930	S.CER ECJ0EB1A104K	B	32.7/31.8
C288	4030016930	S.CER ECJ0EB1A104K]	B	20.3/31.3
C289	4030016930	S.CER ECJ0EB1A104K]	B	19.3/32.6
C290	4030016930	S.CER ECJ0EB1A104K	T	25.4/28.7
C291	4030017420	S.CER ECJ0EC1H470J	B	56.1/11.9
C292	4030017460	S.CER ECJ0EB1E102K	B	54.7/8.1
C293	4030017460	S.CER ECJ0EB1E102K	T	77.4/24.4
C294	4030017460	S.CER ECJ0EB1E102K	B	4.7/26.2
C295	4030017460	S.CER ECJ0EB1E102K	T	71.5/24.7

[MAIN UNIT]

REF NO.	ORDER NO.	DESCRIPTION	M.	H/V LOCATION
C296	4030017460	S.CER ECJ0EB1E102K	T	77.4/23.4
C297	4030017460	S.CER ECJ0EB1E102K	T	75.9/21
C298	4030017460	S.CER ECJ0EB1E102K	T	2.8/31.8
C299	4030017460	S.CER ECJ0EB1E102K	T	2.8/32.8
C300	4030017460	S.CER ECJ0EB1E102K	T	2.8/33.8
C301	4030017460	S.CER ECJ0EB1E102K	T	2.8/30.5
C302	4030017620	S.CER ECJ0EC1H100C	B	48.6/14.3
C303	4030017460	S.CER ECJ0EB1E102K	B	50.9/13
C304	4030016930	S.CER ECJ0EB1A104K	T	18.7/37.4
C305	4030016930	S.CER ECJ0EB1A104K	T	24.4/37.5
C333	4030017420	S.CER ECJ0EC1H470J	T	46.9/5.4
C339	4030017520	S.CER ECJ0EC1H0R3B	T	45.4/6.8
C363	4030017580	S.CER ECJ0EC1H060C	B	47.3/13.8
C364	4030017580	S.CER ECJ0EC1H060C	B	46/11.2
C365	4030009520	S.CER C1608 CH 1H 020B-T	B	69.3/5.8
C366	4030017460	S.CER ECJ0EB1E102K	T	65.8/27.6
C367	4030009910	S.CER C1608 CH 1H 040B-T	B	58.5/4.8
C368	4030017420	S.CER ECJ0EC1H470J	T	66.3/28.9
C369	4030006860	S.CER C1608 JB 1H 102K-T	T	55.3/18.7
C370	4030017460	S.CER ECJ0EB1E102K	B	51.7/26.2
C371	4030017460	S.CER ECJ0EB1E102K	T	62.1/10.8
C372	4030017590	S.CER ECJ0EC1H070C	B	53.5/26.2
C373	4030017460	S.CER ECJ0EB1E102K	T	52.6/30.1
C374	4550006650	S.TAN ECST1CY685R	B	52.6/15.7
C375	4550006250	S.TAN TEESVA 1A 106M8L	T	49.7/33.5
J1	6510023520	S.CNR 54104-3692	T	7.4/25.2
F1	5210000900	S.FUS 0434003.NRP	T	86.1/36.8
S1	2260002750	S.SW EVQP7M01K	T	91.2/34
EP1	6910015370	S.BEA ACZ1005Y-102-T	T	53.4/35.2
EP3	6910015370	S.BEA ACZ1005Y-102-T	B	34.8/43.4
EP4	6910015600	S.BEA ACZ1005Y-241	T	34.3/26.1
EP5	6910015600	S.BEA ACZ1005Y-241	T	23.5/29.8
IC401	1140011780	S.IC HD6432264F01TF	T	22.9/28
IC403	1110005340	S.IC NJM12902V-TE1	T	19.2/43.2
IC405	1110001810	S.IC TA7368F (ER)	T	25.9/53.3
IC406	1130011740	S.IC TC7W66FK (TE85L)	T	7.2/42.3
IC407	1110005330	S.IC NJM12904V-TE1	T	7.1/31.3
IC408	1110006260	S.IC BD5242G-TR	T	30.4/18.5

M.=Mounted side (T: Mounted on the Top side, B: Mounted on the Bottom side)
S.=Surface mount

[FRONT UNIT]

REF NO.	ORDER NO.	DESCRIPTION	M.	H/V LOCATION
IC409	1130011580	S.IC 24LC64T-I/SN	T	8.8/17.8
IC410	1130007570	S.IC BU4094BCFV-E2	T	40.6/37.3
Q401	1520000450	S.TR 2SB1132 T100 Q	T	35.1/44.8
Q402	1590001190	S.TR XP6501-(TX) .AB	T	34.2/40.7
Q403	1530002840	S.TR 2SC4116-Y (TE85R)	B	10.8/57
Q404	1560001330	S.FET RSR025N03	B	11.6/59.9
Q405	1560001330	S.FET RSR025N03	B	15.1/59.9
Q406	1590000430	S.TR DTC144EUA T106	B	15.6/57
Q407	1590000720	S.TR DTA144EUA T106	T	42.6/30.6
Q408	1590000430	S.TR DTC144EUA T106	T	26.5/39.1
Q409	1590002370	S.TR XP4111 (TX)	T	39.8/30.8
Q411	1590001660	S.TR XP4312 (TX)	T	27.4/18.6
Q412	1590000720	S.TR DTA144EUA T106	T	13/17.6
Q413	1560001330	S.FET RSR025N03	B	32.3/53
D401	1790001250	S.DIO MA2S111-(TX)	T	15.9/17.2
D402	1790001250	S.DIO MA2S111-(TX)	T	17.8/17.4
D403	1790001250	S.DIO MA2S111-(TX)	T	13.1/15.7
D404	1790001260	S.DIO MA2S077-(TX)	T	34.7/18.6
D406	1790001250	S.DIO MA2S111-(TX)	T	36.5/36.9
X401	6050011720	S.XTL CR-764 (19.6608 MHz)	T	42.1/18.8
R402	7030005060	S.RES ERJ2GEJ 333 X (33 kΩ)	T	11.6/51.8
R403	7030005120	S.RES ERJ2GEJ 102 X (1 kΩ)	T	16/18.4
R404	7030005120	S.RES ERJ2GEJ 102 X (1 kΩ)	T	19/19.6
R405	7030007340	S.RES ERJ2GEJ 153 X (15 kΩ)	T	6/36.6
R406	7030005210	S.RES ERJ2GEJ 822 X (8.2 kΩ)	T	6/37.6
R407	7030005230	S.RES ERJ2GEJ 334 X (330 kΩ)	T	6.5/26.3
R408	7030005090	S.RES ERJ2GEJ 104 X (100 kΩ)	T	6/35.6
R409	7030005090	S.RES ERJ2GEJ 104 X (100 kΩ)	T	16/19.4
R410	7030005090	S.RES ERJ2GEJ 104 X (100 kΩ)	T	9.4/38.8
R411	7030005090	S.RES ERJ2GEJ 104 X (100 kΩ)	T	11.3/24.3
R412	7030005090	S.RES ERJ2GEJ 104 X (100 kΩ)	T	28/14.2
R413	7030005600	S.RES ERJ2GEJ 273 X (27 kΩ)	T	26/14.2
R414	7030005600	S.RES ERJ2GEJ 273 X (27 kΩ)	T	33.9/14.3
R415	7030005100	S.RES ERJ2GEJ 154 X (150 kΩ)	T	37.9/23
R416	7030005100	S.RES ERJ2GEJ 154 X (150 kΩ)	T	31.2/21
R417	7030005170	S.RES ERJ2GEJ 474 X (470 kΩ)	T	16/14.9
R418	7030005170	S.RES ERJ2GEJ 474 X (470 kΩ)	T	5/15
R420	7030005600	S.RES ERJ2GEJ 273 X (27 kΩ)	T	28.8/37.7
R421	7030005090	S.RES ERJ2GEJ 104 X (100 kΩ)	T	30.1/38
R422	7030005090	S.RES ERJ2GEJ 104 X (100 kΩ)	T	30/37
R423	7030005090	S.RES ERJ2GEJ 104 X (100 kΩ)	T	31.7/37
R426	7030005230	S.RES ERJ2GEJ 334 X (330 kΩ)	T	14.7/37.7
R427	7030005240	S.RES ERJ2GEJ 473 X (47 kΩ)	T	16/39.9
R428	7030005240	S.RES ERJ2GEJ 473 X (47 kΩ)	T	16/38.9
R429	7030005040	S.RES ERJ2GEJ 472 X (4.7 kΩ)	T	13.7/38.1
R430	7030007350	S.RES ERJ2GEJ 393 X (39 kΩ)	T	12.7/40.6
R432	7030005720	S.RES ERJ2GEJ 563 X (56 kΩ)	T	13.7/40.6
R433	7030005090	S.RES ERJ2GEJ 104 X (100 kΩ)	T	11.7/40.6
R434	7030005000	S.RES ERJ2GEJ 471 X (470 Ω)	B	35/56.5
R435	7030007260	S.RES ERJ2GEJ 330 X (33 Ω)	T	22.6/56.2
R436	7030005530	S.RES ERJ2GEJ 100 X (10 Ω)	T	24.4/49.8
R437	7030005120	S.RES ERJ2GEJ 102 X (1 kΩ)	T	31.7/41.4
R438	7030007300	S.RES ERJ2GEJ 332 X (3.3 kΩ)	T	31.7/39.4
R439	7030009140	S.RES ERJ2GEJ 272 X (2.7 kΩ)	T	34.6/38.9
R440	7030005090	S.RES ERJ2GEJ 104 X (100 kΩ)	T	42.8/32.7
R441	7030005070	S.RES ERJ2GEJ 683 X (68 kΩ)	T	37.3/35.5
R442	7030005170	S.RES ERJ2GEJ 474 X (470 kΩ)	B	12.7/57.3
R443	7030005170	S.RES ERJ2GEJ 474 X (470 kΩ)	B	11.4/55.2
R444	7030005090	S.RES ERJ2GEJ 104 X (100 kΩ)	B	13.7/57.3
R445	7030004980	S.RES ERJ2GEJ 101 X (100 Ω)	B	32.3/55.2
R446	7030005090	S.RES ERJ2GEJ 104 X (100 kΩ)	B	30.1/52.1
R455	7030005000	S.RES ERJ2GEJ 471 X (470 Ω)	T	43.2/27.8
R456	7030004980	S.RES ERJ2GEJ 101 X (100 Ω)	T	43.2/28.8
R457	7030005000	S.RES ERJ2GEJ 471 X (470 Ω)	B	45.2/48.4
R458	7030005120	S.RES ERJ2GEJ 102 X (1 kΩ)	B	43.9/49.9
R461	7030005110	S.RES ERJ2GEJ 224 X (220 kΩ)	T	33.1/33.6
R462	7030005720	S.RES ERJ2GEJ 563 X (56 kΩ)	T	32.1/33.6
R463	7030005220	S.RES ERJ2GEJ 223 X (22 kΩ)	T	31.1/33.6
R464	7030005220	S.RES ERJ2GEJ 223 X (22 kΩ)	T	32.1/35.2
R465	7030005050	S.RES ERJ2GEJ 103 X (10 kΩ)	T	31.1/35.2
R466	7030005240	S.RES ERJ2GEJ 473 X (47 kΩ)	T	26.6/41.4
R467	7030005240	S.RES ERJ2GEJ 473 X (47 kΩ)	T	25.6/41.4
R468	7030005240	S.RES ERJ2GEJ 473 X (47 kΩ)	T	23.6/41.4
R469	7030005040	S.RES ERJ2GEJ 472 X (4.7 kΩ)	T	18.9/39
R470	7030005240	S.RES ERJ2GEJ 473 X (47 kΩ)	T	20.1/38.7
R471	7030005110	S.RES ERJ2GEJ 224 X (220 kΩ)	T	34.6/24.3
R472	7030005090	S.RES ERJ2GEJ 104 X (100 kΩ)	T	33.6/24.3
R473	7030005240	S.RES ERJ2GEJ 473 X (47 kΩ)	T	32.6/24.3
R474	7030005220	S.RES ERJ2GEJ 223 X (22 kΩ)	T	31.6/24.3
R475	7030005050	S.RES ERJ2GEJ 103 X (10 kΩ)	T	35.6/24.3
R476	7030005070	S.RES ERJ2GEJ 683 X (68 kΩ)	T	27.2/45.2
R477	7030005070	S.RES ERJ2GEJ 683 X (68 kΩ)	T	25.2/45.2
R478	7030005070	S.RES ERJ2GEJ 683 X (68 kΩ)	T	23.9/44.8
R479	7030005070	S.RES ERJ2GEJ 683 X (68 kΩ)	T	18.6/47.9
R480	7030005070	S.RES ERJ2GEJ 683 X (68 kΩ)	T	17/46.9
R482	7030005090	S.RES ERJ2GEJ 104 X (100 kΩ)	T	37.2/34.1
R483	7030005090	S.RES ERJ2GEJ 104 X (100 kΩ)	T	16/21.4
R484	7030005090	S.RES ERJ2GEJ 104 X (100 kΩ)	T	16/20.4
R485	7030005090	S.RES ERJ2GEJ 104 X (100 kΩ)	T	11.1/22.7
R486	7410001130	S.ARY EXB28V102JX (1 kΩ)	T	13.6/24.7

[FRONT UNIT]

REF NO.	ORDER NO.	DESCRIPTION	M.	H/V LOCATION
R487	7030005090	S.RES ERJ2GEJ 104 X (100 kΩ)	T	33.5/23
R488	7030005090	S.RES ERJ2GEJ 104 X (100 kΩ)	T	31.9/31.3
R489	7030005050	S.RES ERJ2GEJ 103 X (10 kΩ)	T	32.9/31.3
R490	7030005050	S.RES ERJ2GEJ 103 X (10 kΩ)	T	33.9/31.3
R491	7030005530	S.RES ERJ2GEJ 100 X (10 Ω)	T	37.3/17.5
R492	7030005160	S.RES ERJ2GEJ 105 X (1 MΩ)	T	37.3/18.5
R493	7030008010	S.RES ERJ2GEJ 123 X (12 kΩ)	T	35.9/18.8
R494	7030008010	S.RES ERJ2GEJ 123 X (12 kΩ)	T	33.6/18.3
R495	7030008010	S.RES ERJ2GEJ 123 X (12 kΩ)	T	36.9/20.8
R496	7030005050	S.RES ERJ2GEJ 103 X (10 kΩ)	T	8/23
R497	7030005050	S.RES ERJ2GEJ 103 X (10 kΩ)	T	11.3/25.3
R500	7030005090	S.RES ERJ2GEJ 104 X (100 kΩ)	T	28.7/20.6
R501	7030005090	S.RES ERJ2GEJ 104 X (100 kΩ)	T	29.3/16
R502	7030010080	S.RES ERJ2RHD 104 X (100 kΩ)	T	36.9/14.3
R503	7030010080	S.RES ERJ2RHD 104 X (100 kΩ)	T	38.9/14.3
R506	7030007300	S.RES ERJ2GEJ 332 X (3.3 kΩ)	T	8.8/25.5
R507	7030005600	S.RES ERJ2GEJ 273 X (27 kΩ)	T	7.8/25.5
R508	7030007290	S.RES ERJ2GEJ 222 X (2.2 kΩ)	T	5.3/22
R509	7030005090	S.RES ERJ2GEJ 104 X (100 kΩ)	T	25.1/18
R511	7030005700	S.RES ERJ2GEJ 274 X (270 kΩ)	T	7.8/35.6
R512	7030005090	S.RES ERJ2GEJ 104 X (100 kΩ)	T	5.2/25.8
R513	7030009290	S.RES ERJ2GEJ 562 X (5.6 kΩ)	T	5.4/39.8
R514	7030010040	S.RES ERJ2GE-JPW	T	7.4/48.6
C401	4030017460	S.CER ECJ0EB1E102K	T	10.6/51.8
C402	4030017460	S.CER ECJ0EB1E102K	T	13.6/19.4
C403	4030017460	S.CER ECJ0EB1E102K	T	18/19.6
C404	4030017460	S.CER ECJ0EB1E102K	T	9.3/41.3
C405	4030017760	S.CER ECJ0EB1H222K	T	7.8/36.6
C406	4030018110	S.CER ECJ0EB1H272K	T	6/38.6
C407	4030017430	S.CER ECJ0EC1H101J	T	6.5/25.3
C408	4030016930	S.CER ECJ0EB1A104K	T	28.7/39.9
C409	4030016930	S.CER ECJ0EB1A104K	T	27.5/37.3
C410	4030016930	S.CER ECJ0EB1A104K	T	29.8/39.9
C411	4030016930	S.CER ECJ0EB1A104K	T	31.7/38
C412	4030016930	S.CER ECJ0EB1A104K	T	35.9/20.8
C413	4030016930	S.CER ECJ0EB1A104K	T	34.9/20.8
C414	4030017640	S.CER ECJ0EC1H150J	T	37.3/19.5
C415	4030016790	S.CER ECJ0EB1C103K	T	30.2/21
C416	4030017630	S.CER ECJ0EC1H120J	T	38.9/18.8
C417	4030017580	S.CER ECJ0EC1H060C	T	38.9/20.8
C418	4030016930	S.CER ECJ0EB1A104K	T	33/16
C419	4550006250	S.TAN TEESVA 1A 106M8L	T	23.7/16.4
C420	4030016930	S.CER ECJ0EB1A104K	T	23.4/18
C421	4030016930	S.CER ECJ0EB1A104K	T	16/37.9
C423	4030016930	S.CER ECJ0EB1A104K	T	12.7/39
C424	4030017460	S.CER ECJ0EB1E102K	T	30.3/54.8
C425	4030017730	S.CER ECJ0EB1E471K	T	14.7/40.6
C426	4030017460	S.CER ECJ0EB1E102K	B	35.5/55.2
C427	4550006080	S.TAN TEESVB2 1C 106M8L	T	40.4/45.9
C428	4030016930	S.CER ECJ0EB1A104K	T	36.9/47.5
C429	4030017460	S.CER ECJ0EB1E102K	T	33.7/48.3
C430	4030017460	S.CER ECJ0EB1E102K	T	31.7/40.4
C431	4030016930	S.CER ECJ0EB1A104K	T	34.3/37.9
C432	4030017460	S.CER ECJ0EB1E102K	T	39.1/43.2
C433	4030017420	S.CER ECJ0EC1H470J	B	25.2/53.3
C434	4550006250	S.TAN TEESVA 1A 106M8L	T	20.7/54.1
C435	4550007060	S.TAN ECSTIAX336R	T	17.8/54.8
C436	4030016950	S.CER ECJ0EB1A473K	T	26.2/49.8
C437	4030017490	S.CER C1608 JB 1A 105K-T	B	33.8/56
C441	4030016960	S.CER ECJ0EB1C183K	T	25.7/42.7
C442	4030016930	S.CER ECJ0EB1A104K	T	24.6/41.4
C443	4030017750	S.CER ECJ0EB1E122K	T	23.9/42.7
C444	4030016930	S.CER ECJ0EB1A104K	T	20.1/39.7
C445	4030017460	S.CER ECJ0EB1E102K	T	33.1/35.2
C446	4030017460	S.CER ECJ0EB1E102K	T	26.2/45.2
C447	4030017760	S.CER ECJ0EB1H222K	T	23.9/45.8
C448	4030017690	S.CER ECJ0EC1H121J	T	25.7/43.8
C449	4030017770	S.CER ECJ0EB1E332K	T	18.6/46.9
C450	4030017420	S.CER ECJ0EC1H470J	T	17/47.9
C461	4030017420	S.CER ECJ0EC1H470J	T	38.9/23
C462	4030017420	S.CER ECJ0EC1H470J	T	32.2/21
C463	4030017420	S.CER ECJ0EC1H470J	T	16/16
C464	4030017420	S.CER ECJ0EC1H470J	T	4/15
C465	4030017420	S.CER ECJ0EC1H470J	T	27/14.2
C466	4030017420	S.CER ECJ0EC1H470J	T	34.9/14.3
C467	4030017420	S.CER ECJ0EC1H470J	T	29.3/14.7
C468	4030017420	S.CER ECJ0EC1H470J	T	35.9/14.3
C473	4030016790	S.CER ECJ0EB1C103K	T	37.9/14.3
C474	4030017490	S.CER C1608 JB 1A 105K-T	T	5.7/23.1
C475	4030017460	S.CER ECJ0EB1E102K	T	8.9/55.3
C476	4030017460	S.CER ECJ0EB1E102K	T	10.1/47.6
C477	4030017420	S.CER ECJ0EB1E470K	T	12.7/36.4
C478	4030017420	S.CER ECJ0EB1E470K	T	13.7/36.4
C479	4030017460	S.CER ECJ0EB1E102K	T	19.2/16.5
C481	4030017460	S.CER ECJ0EB1E102K	T	4.4/35.6
C482	4030017460	S.CER ECJ0EB1E102K	T	11.5/37.7
C483	4030017460	S.CER ECJ0EB1E102K	T	38.1/43.4
C484	4030017460	S.CER ECJ0EB1E102K	B	14.7/55.2
C485	4030017460	S.CER ECJ0EB1E102K	B	7.3/58
C486	4030017460	S.CER ECJ0EB1E102K	T	10.1/56.5
C487	4030017460	S.CER ECJ0EB1E102K	T	34.3/36.9
C488	4030017460	S.CER ECJ0EB1E102K	T	23.9/43.7
C489	4030017460	S.CER ECJ0EB1E102K	T	8.5/27.1
C490	4030017460	S.CER ECJ0EB1E102K	T	41.2/28.6
C491	4030017460	S.CER ECJ0EB1E102K	T	37.3/38.8
C492	4030017460	S.CER ECJ0EB1E102K	T	8/22
C493	4030016930	S.CER ECJ0EB1A104K	T	16.9/34.7

M.=Mounted side (T: Mounted on the Top side, B: Mounted on the Bottom side)
S.=Surface mount

[FRONT UNIT]

REF NO.	ORDER NO.	DESCRIPTION	M.	H/V LOCATION
C494	4030017460	S.CER ECJ0EB1E102K	T	39.6/67.3
C495	4030017460	S.CER ECJ0EB1E102K	T	9.4/39.8
C496	4550007060	S.TAN ECSTIAX336R	T	14.5/54.8
C497	4030018390	S.CER ECJ0EB1C563K	T	5.4/41.5
C498	4030017430	S.CER ECJ0EC1H101J	T	7.8/37.6
C499	4030017420	S.CER ECJ0EC1H470J	T	17.6/39.7
C500	4030016930	S.CER ECJ0EB1A104K	B	4.1/39
J401	6510023520	S.CNR 54104-3692	T	27.8/6.8
J402	6510023830	S.CNR SM04B-SRSS-TB	T	34.9/52.5
DS401	5030002730	LCD L3-0048TAY-5		
DS402	5040002420	S.LED SML-310MT T86	B	13.5/16.1
DS403	5040002420	S.LED SML-310MT T86	B	32.7/15.3
DS404	5040002960	S.LED SML-A12MT T86	B	6.4/38
DS405	5040002960	S.LED SML-A12MT T86	B	42.6/38
DS406	5040002670	S.LED CL-165HR/YG	B	45.3/50.2
MC401	7700002760	MIC EM6027P-46C33-G-01		
S401	2260002840	SW SKHLLFA010		
SP401	2510001092	SP 036D0801B <FG>		
W401	8900011880	CBL OPC-1210 (P=0.5 N=36 L=70)		
W402	7120000470	JMP ERDS2T0		
W403	7120000470	JMP ERDS2T0		
W404	9026007050	JMP 24/02/030/W01/W01		
W405	9026007060	JMP 24/06/030/W01/W01		
EP402	8930061530	LCT SRCN-2681-SP-N-W		

[CONNECT UNIT]

REF NO.	ORDER NO.	DESCRIPTION	M.	H/V LOCATION
D701	1790001810	S.VSR AVR-M1005C080MTABB	B	8/2.4
D702	1790001810	S.VSR AVR-M1005C080MTABB	B	8/3.4
D703	1790001810	S.VSR AVR-M1005C080MTABB	B	8/4.4
D704	1790001810	S.VSR AVR-M1005C080MTABB	T	9.6/6.1
D705	1790001810	S.VSR AVR-M1005C080MTABB	B	9.7/18.9
R701	7410001130	S.ARY EXB28V102JX	T	8/4.8
C701	4030017460	S.CER ECJ0EB1E102K	B	9.7/9.4
C702	4030017460	S.CER ECJ0EB1E102K	B	9.7/12.2
C703	4030017460	S.CER ECJ0EB1E102K	B	9.7/15.3
C704	4030017460	S.CER ECJ0EB1E102K	B	7.9/19.7
EP701	6910012350	S.BEA MMZ1608Y 102BT	B	8.2/8.6
EP702	6910012350	S.BEA MMZ1608Y 102BT	B	8.2/11.6
EP703	6910012350	S.BEA MMZ1608Y 102BT	B	8.2/14.6
EP704	6910012350	S.BEA MMZ1608Y 102BT	B	8.5/17.2
EP705	6910012350	S.BEA MMZ1608Y 102BT	B	9.8/17.2

[VR UNIT]

REF NO.	ORDER NO.	DESCRIPTION	M.	H/V LOCATION
R601	7210003130	VAR TP76N97N-13F-10KA-2497		
W601	8900012340	CBL OPC-1260		

M.=Mounted side (T: Mounted on the Top side, B: Mounted on the Bottom side)
S.=Surface mount

BOARD LAYOUTS

The combination of this side and the bottom side shows the board layout in the same configuration as the actual P.C.Board.

• FRONT UNIT (TOP VIEW)

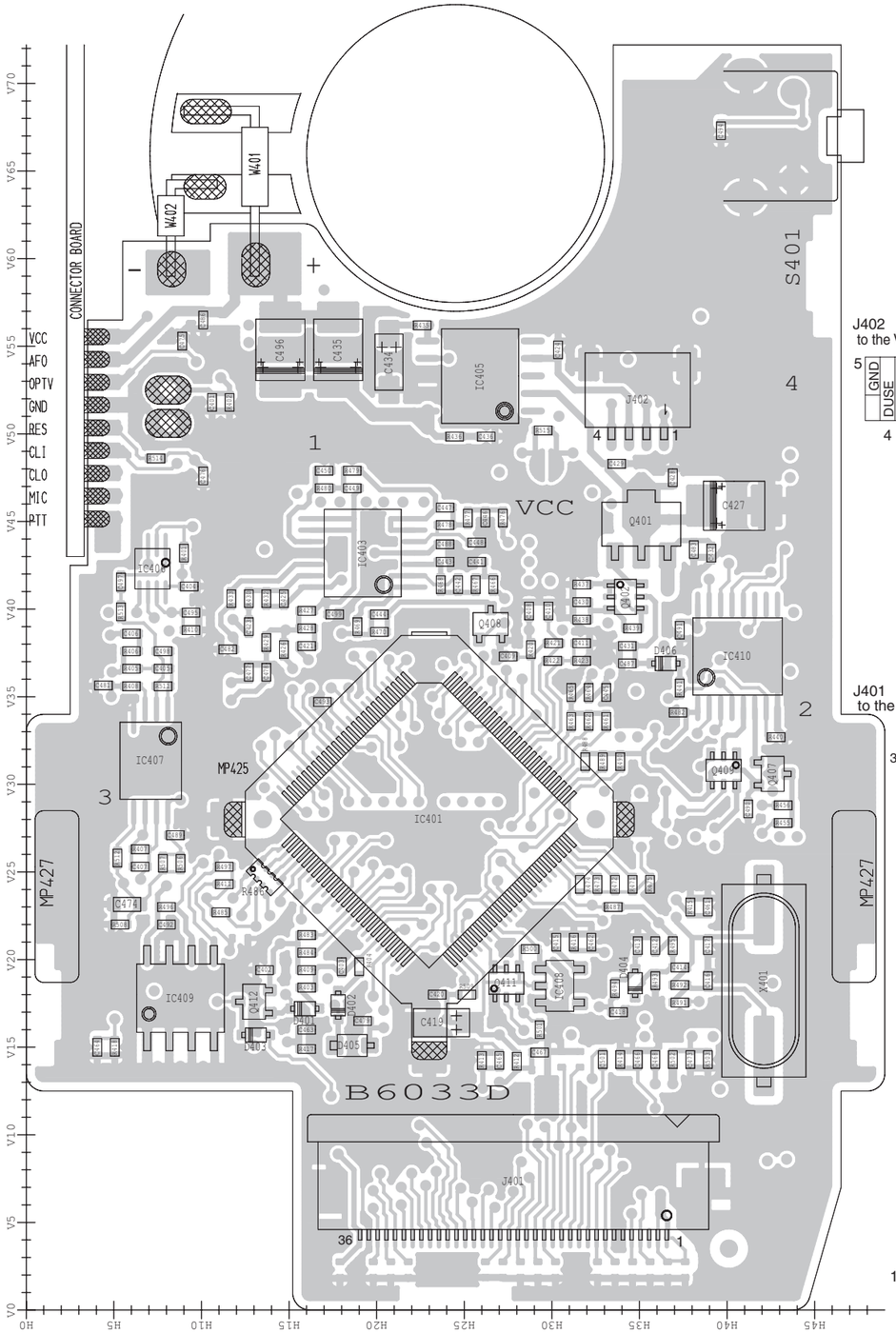

J402
to the VR unit W601

5	GND
	DUSE
	AFOUT
	AFON
	PWON
6	GND

J401
to the MAIN unit J1

38	GND
36	MIC
	GND
	TONE
	CDCS
	SIGNAL
	SO
	SCK
	MDIO
	MSCK
	SCST
	PLST
	SCAT
	EXSM
	EXOE
	MTOT
	MTCK
	NOIS
	SDEC
	CDEC
	KR1
	LVIN
	RSSI
	TEMP
	UNLK
	MDIA
	MROF
	DAST
	CSFT
	PWON
	GND
	GND
	S5V
	CPU5
	NC
	VCC
1	VCC
	GND
37	

• VR UNIT (TOP VIEW)

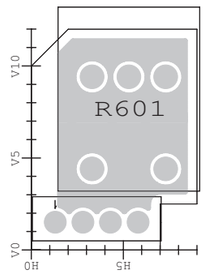

• CONNECT UNIT (TOP VIEW)

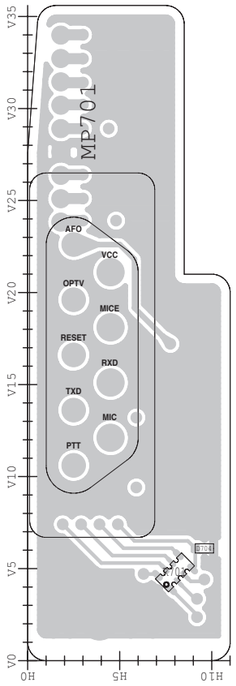

• MAIN UNIT (TOP VIEW)

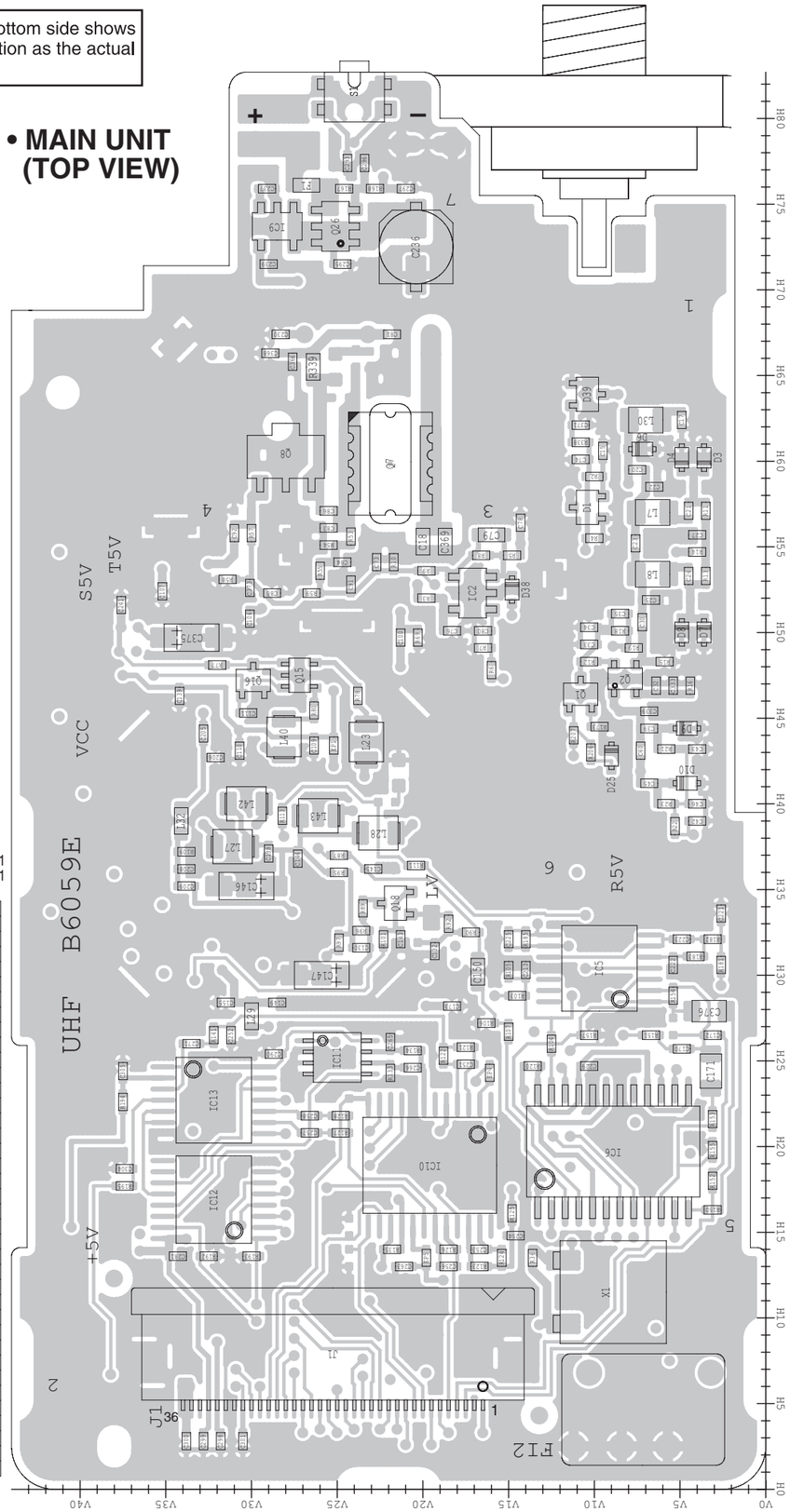

J1
to the FRONT unit J401

38	GND
36	VCC
	VCC
	NC
	+5V
	S5V
	GND
	GND
	PWON
	CSFT
	DAST
	MROF
	MDIA
	UNLK
	TEMP
	RSSI
	LVIN
	KR1
	CDEC
	SDEC
	NOIS
	MTCK
	MTOT
	EXOE
	EXSM
	SCAT
	PLST
	SCST
	MSCK
	MDIO
	SCK
	SO
	SIGNAL
	CDCS
	TONE
	GND
1	MIC
	GND
37	

The combination of this side and the bottom side shows the board layout in the same configuration as the actual P.C.Board.

• MAIN UNIT (BOTTOM VIEW)

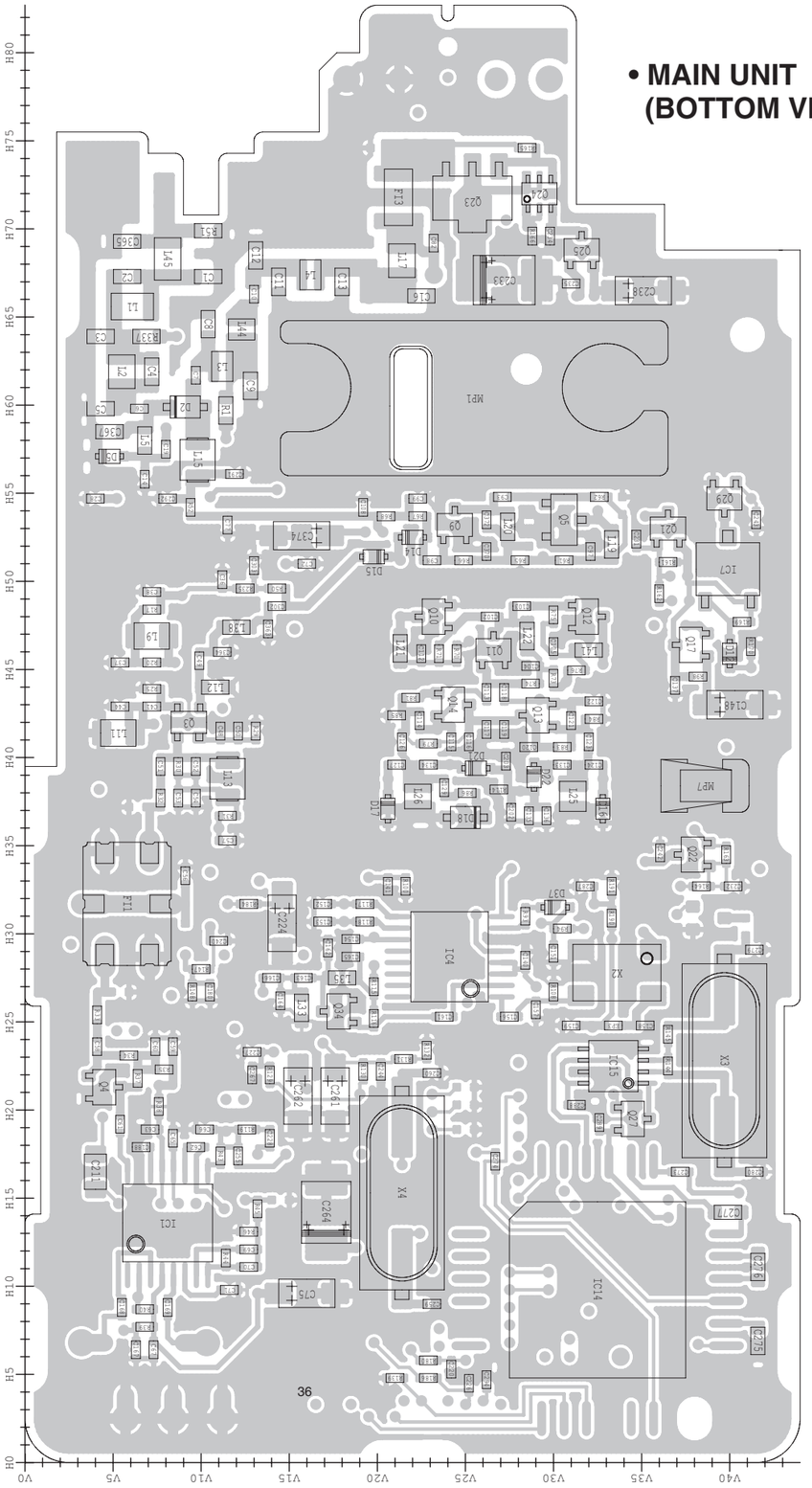

• VR UNIT (BOTTOM VIEW)

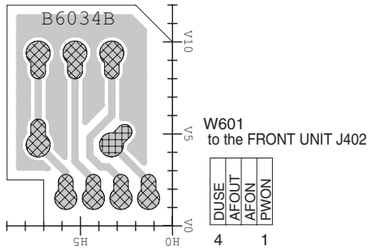

• CONNECT UNIT (BOTTOM VIEW)

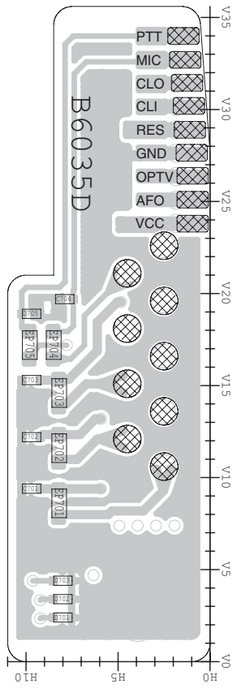

• FRONT UNIT (BOTTOM VIEW)

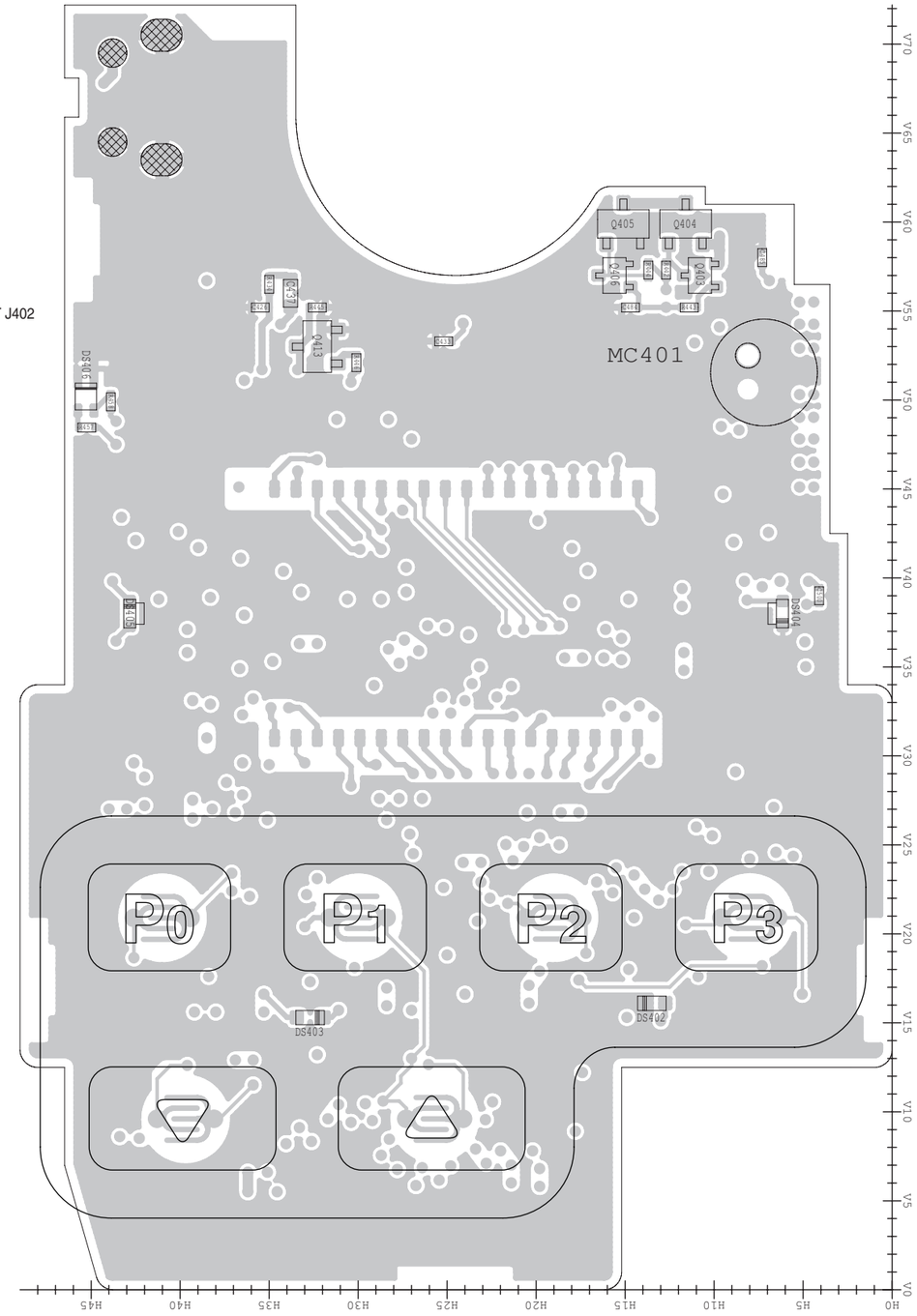

BLOCK DIAGRAM

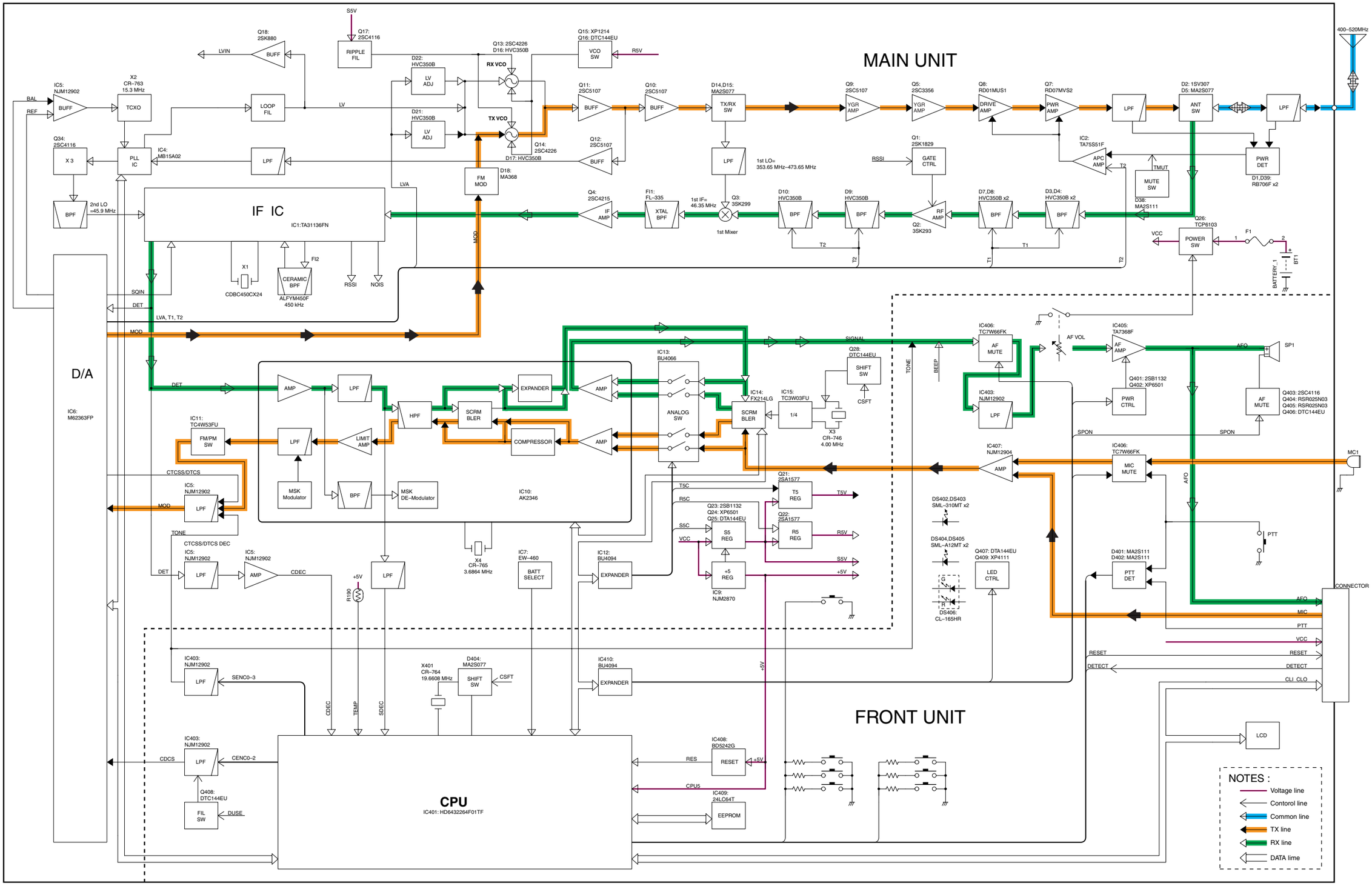

VOLTAGE DIAGRAM

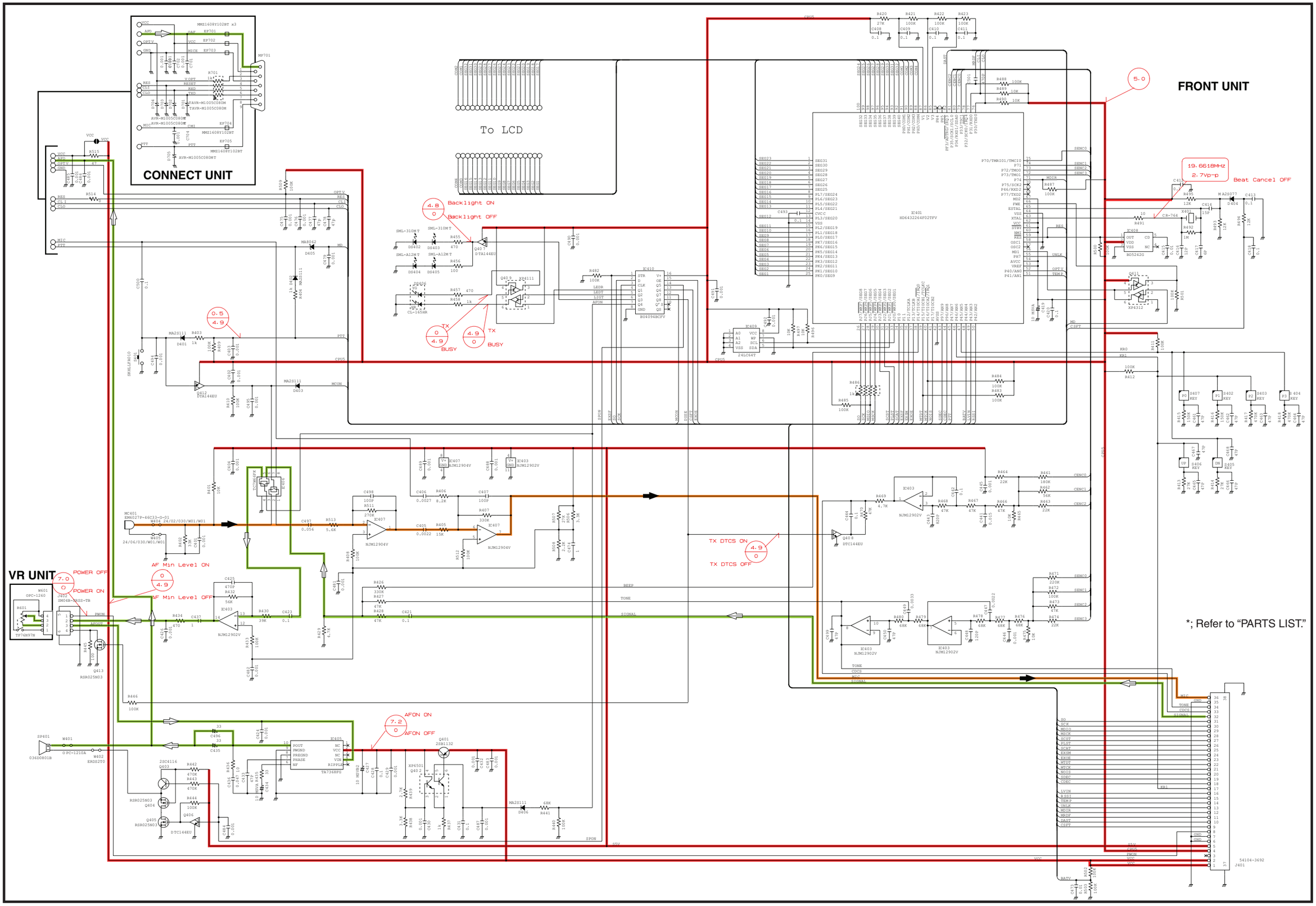

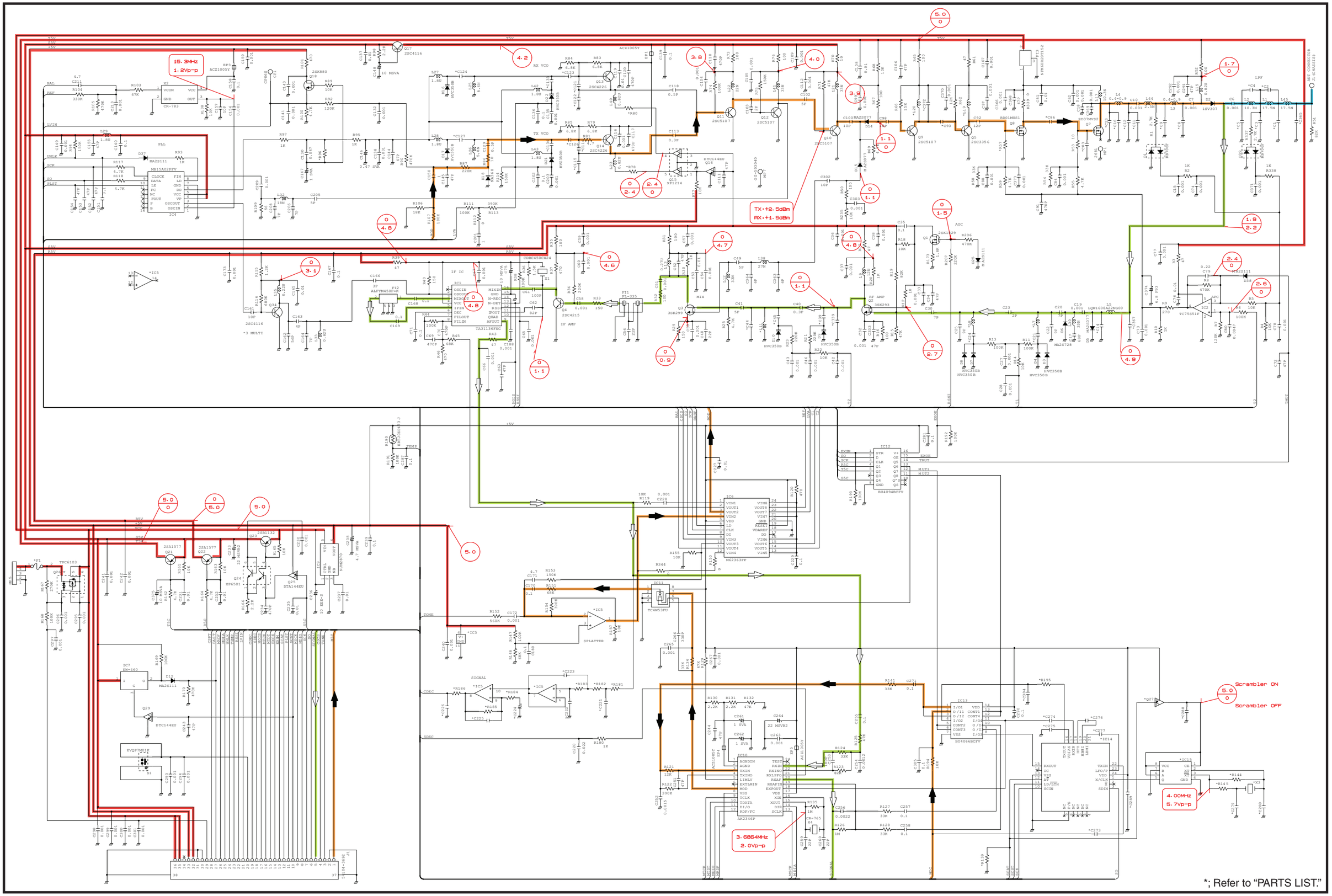
15.3MHz
1.2Vp-p
TX:+2.5dBm
RX:+1.5dBm
4.00MHz
5.7Vp-p
3.6864MHz
2.0Vp-p
Scrambler ON
Scrambler OFF
ANT CONNECTOR
J1 (CHASSIS)
RX VCO
TX VCO
PLL
IF IC
IF AMP
MIX
RF AMP
AGC
LPF
SPLATTER
SIGNAL
*; Refer to "PARTS LIST."

ICOM

SERVICE MANUAL

UHF TRANSCEIVER

IC-F61 (ATEX VERSION)

S-14219MZ-C1
Jan. 2006

Icom Inc.

CAUTION

The repair and maintenance of an ATEX approved transceiver can only be performed in an ATEX approved repair facility. The ATEX approval will be canceled if ATEX intrinsically safe radios are repaired anywhere else except in an approved facility.

INTRODUCTION

This service manual describes the latest service information for the **IC-F61** UHF TRANSCEIVER at the time of publication.

MODEL	VERSION	SYMBOL	I/S	TX HI-POWER
IC-F61	Europe	EUR	ATEX	5W

To upgrade quality, all electrical or mechanical parts and internal circuits are subject to change without notice or obligation.

DANGER

NEVER connect the transceiver to an AC outlet or to a DC power supply that uses more than 8 V. Such a connection could cause a fire or electric hazard.

DO NOT expose the transceiver to rain, snow or any liquids.

DO NOT reverse the polarities of the power supply when connecting the transceiver.

DO NOT apply an RF signal of more than 20 dBm (100 mW) to the antenna connector. This could damage the transceiver's front end.

ORDERING PARTS

Be sure to include the following four points when ordering replacement parts:

1. 10-digit order numbers
2. Component part number and name
3. Equipment model name and unit name
4. Quantity required

<**SAMPLE ORDER**>

5030002630 LCD	L3-0048TAY-2	IC-F61	Front unit	5 pieces
8810010120 Screw	BO 2x8 SUS ZK	IC-F61	Chassis	10 pieces

Addresses are provided on the inside back cover for your convenience.

REPAIR NOTES

1. Make sure a problem is internal before disassembling the transceiver.
2. **DO NOT** open the transceiver until the transceiver is disconnected from its power source.
3. **DO NOT** force any of the variable components. Turn them slowly and smoothly.
4. **DO NOT** short any circuits or electronic parts. An insulated turning tool **MUST** be used for all adjustments.
5. **DO NOT** keep power ON for a long time when the transceiver is defective.
6. **DO NOT** transmit power into a signal generator or a sweep generator.
7. **ALWAYS** connect a 30 dB to 40 dB attenuator between the transceiver and a deviation meter or spectrum analyzer when using such test equipment.
8. **READ** the instructions of test equipment thoroughly before connecting equipment to the transceiver.

Icom, Icom Inc. and ICOM logo are registered trademarks of Icom Incorporated (Japan) in the United States, the United Kingdom, Germany, France, Spain, Russia and/or other countries.

TABLE OF CONTENTS

SECTION 1 SPECIFICATIONS

SECTION 2 INSIDE VIEWS

SECTION 3 DISASSEMBLY INSTRUCTIONS

SECTION 4 CIRCUIT DESCRIPITON

4-1 RECEIVER CIRCUITS 4-1
4-2 TRANSMITTER CIRCUITS 4-2
4-3 PLL CIRCUITS 4-3
4-4 POWER SUPPLY CIRCUITS 4-4
4-5 OTHER CIRCUITS 4-5
4-6 PORT ALLOCATIONS 4-5

SECTION 5 ADJUSTMENT PROCEDURES

5-1 PREPARATION 5-1
5-2 SOFTWARE ADJUSTMENTS 5-4

SECTION 6 PARTS LIST

SECTION 7 MECHANICAL PARTS AND DISASSEMBLY

SECTION 8 SEMI-CONDUCTOR INFORMATION

SECTION 9 BOARD LAYOUTS

9-1 MAIN UNIT 9-1
9-2 FRONT UNIT 9-3
9-3 VR UNIT 9-5
9-4 CONNECTOR UNIT 9-6

SECTION 10 BLOCK DIAGRAM

SECTION 11 VOLTAGE DIAGRAM

11-1 MAIN UNIT 11-1
11-2 FRONT UNIT 11-2
11-3 VR UNIT / CONNECTOR UNIT 11-3

SECTION 12 CONTACT SPRING ASSEMBLY INSTRUCTION

SECTION 1 SPECIFICATIONS

GENERAL

- Frequency coverage : 400.000–470.000 MHz [USA-88], [USA-98], [EUR-88], [EUR-98], [CHN-88]
  450.000–512.000 MHz [USA-89], [USA-99]
- Type of emission : Wide : 16K0F3E (25.0 kHz)
  Middle : 14K0F3E (20.0 kHz)
  Narrow : 8K50F3E (12.5 kHz)
- Number of conventional channels : 128 ch (Divided into 8 banks)
- Antenna connector : SMA type (50 Ω)
- Operating temperature range : –25˚C to +55˚C
- Power supply requirement : 7.2 V DC nominal (negative ground)
- Current drain (at 7.2 V DC) :

RECEIVING		TRANSMITTING
Stand-by	Max. audio	
85 mA	300 mA	0.7 A

- Dimensions (projections not included) : 56.0(W)×97.0(H)×36.4(D) mm
- Weight (Including BP-227) : Approximately 280 g

TRANSMITTER

- Output power (at 7.2 V DC) : 1 W
- Modulation : Variable reactance frequency modulation
- Maximum permissible deviation : ±5.0 kHz (Wide), ±4.0 kHz (Middle), ±2.5 kHz (Narrow)
- Frequency error : ±2.5 ppm
- Spurious emissions : 0.25 µW (≤ 1 GHz), 1.0 µW (≥ 1 GHz)
- Adjacent channel power : 70 dB min. (Wide, Middle), 60 dB min. (Narrow)
- Audio harmonic distortion : 3 % typical (AF 1kHz, 40 % deviation)
- Residual modulation (with CCITT filter) : 45 dB min (55 dB typical) for Wide
  43 dB min (53 dB typical) for Middle
  40 dB min (50 dB typical) for Narrow
- Limiting charact of modulator : 60–100 % of maximum deviation
- Microphone impedance : 2.2 kΩ

RECEIVER

- Receive system : Double conversion superheterodyne system
- Intermediate frequencies : 1st IF: 46.35 MHz, 2nd IF: 450 kHz
- Sensitivity : 0.63 µV (–111 dBm) emf typical at 20 dB SINAD
- Squelch sensitivity (at threshold) : 0.63 µV (–111 dBm) emf typical
- Adjacent channel selectivity : 70 dB min (75 dB typical) for Wide and Middle
  60 dB min (65 dB typical) for Narrow
- Spurious response : 70 dB
- Intermodulation rejection ratio : 65 dB min (67 dB typical)
- Residual modulation (with CCITT filter) : 45 dB min (55 dB typical) for Wide
  43 dB min (53 dB typical) for Middle
  40 dB min (50 dB typical) for Narrow
- Audio output power : 0.5 W typical at 5% distortion with an 8 Ω load
- Output impedance (Audio) : 8 Ω

Specifications are measured in accordance with EN 300 086.
All stated specifications are subject to change without notice or obligation.

SECTION 2 INSIDE VIEWS

• MAIN UNIT

TOP VIEW

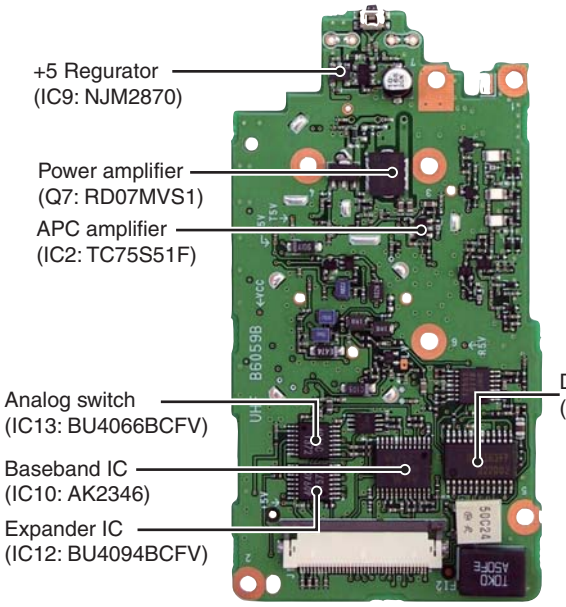

BOTTOM VIEW

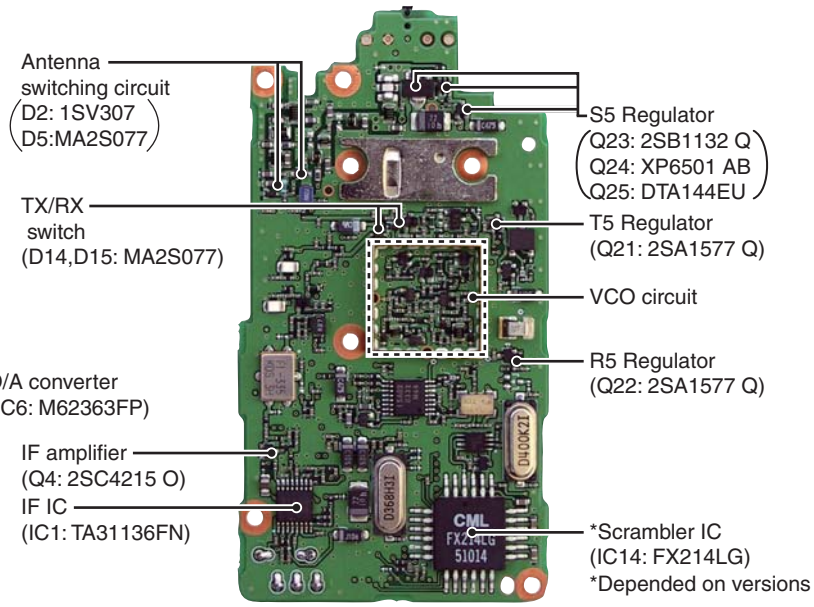

• FRONT UNIT

TOP VIEW

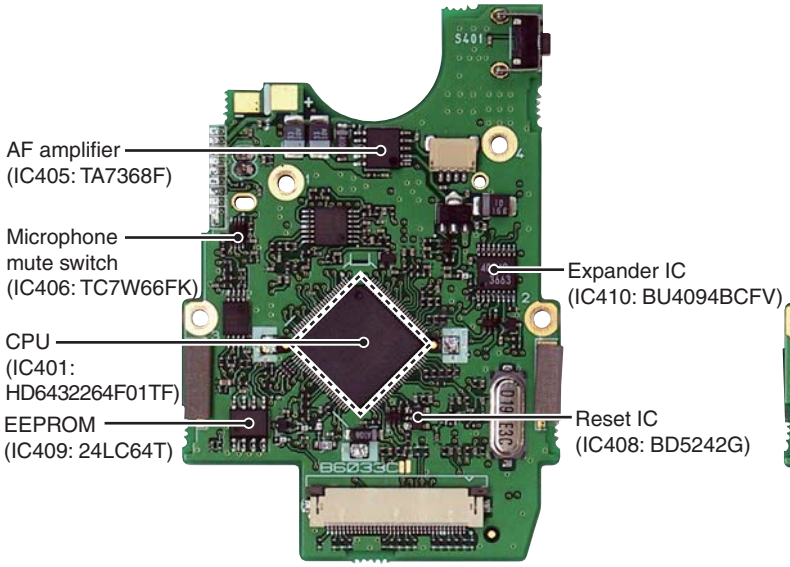

BOTTOM VIEW

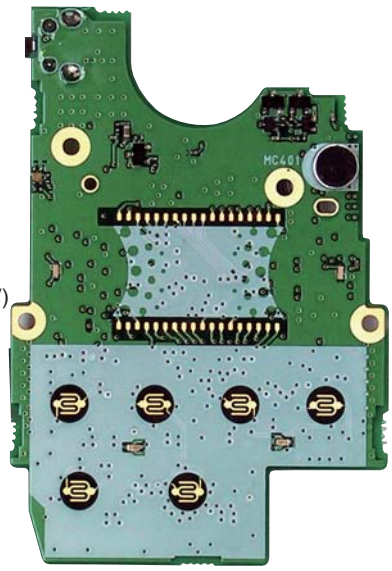

SECTION 3 DISASSEMBLY INSTRUCTIONS

● REMOVING THE CHASSIS UNIT

① Unscrew 1 nut Ⓐ, and remove 1 knob Ⓑ.
② Remove 1 washer Ⓒ, and unscrew 1 screw Ⓓ.
③ Unscrew 2 screws Ⓔ, and remove 2 washers Ⓕ.
④ Unscrew 2 screws Ⓖ.
⑤ Take off the chassis unit in the direction of the arrow.
⑥ Remove the cable Ⓗ from the chassis unit.

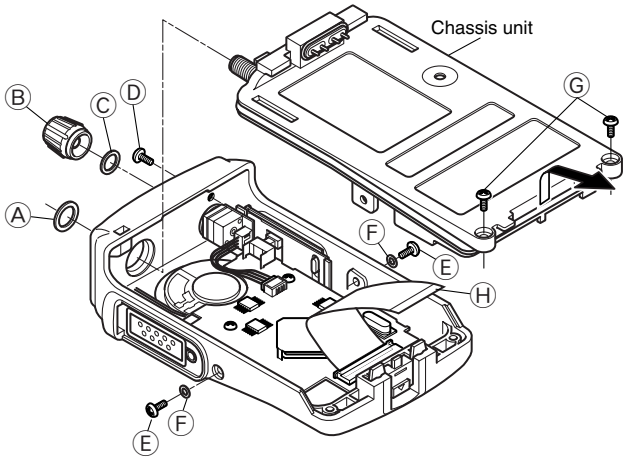

● REMOVING THE FRONT UNIT

① Unscrew 4 screws Ⓜ.
② Unsolder 11 points Ⓝ.
③ Unplug the connector Ⓞ from J402 on the Front unit.
④ Take off the front unit in the direction of the arrow.

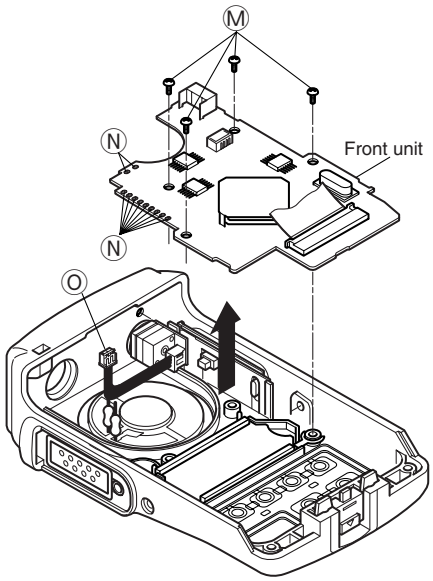

● REMOVING THE MAIN UNIT

① Unscrew 2 screws Ⓘ.
② Unsolder 5 points Ⓙ, and remove the shield cover.
③ Unscrew 5 screws Ⓚ.
④ Unsolder 3 points Ⓛ, and take off the main unit in the direction of the arrow.

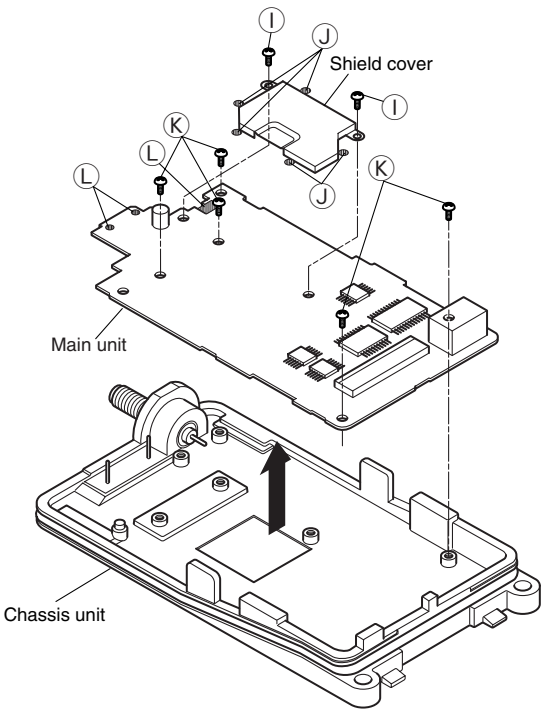

SECTION 4 CIRCUIT DESCRIPTION

4-1 RECEIVER CIRCUITS

4-1-1 ANTENNA SWITCHING CIRCUIT (MAIN UNIT)

The antenna switching circuit functions as a low-pass filter while receiving and a resonator circuit while transmitting. This circuit does not allow transmit signals to enter the receiver circuits.

Received signals enter the antenna connector (CHASSIS; J1) and pass through the low-pass filter (L1, L2, L45, C1 –C5, C365). The filtered signals are passed through the λ/4 type antenna switching circuit (D2, D5, L5) and then applied to the RF circuit.

4-1-2 RF CIRCUIT (MAIN UNIT)

The RF circuit amplifies signals within the range of frequency coverage and filters out-of-band signals.

The signals from the antenna switching circuit pass through the two-stage tunable bandpass filters (D3, D4, D7, D8, L7, L8). The filtered signals are amplified at the RF amplifier (Q2) and then passed through the another two-stage tunable bandpass filters (D9, D10, L9, L11) to suppress unwanted signals. The filtered signals are applied to the 1st mixer circuit.

D3, D4, D7–D10 employ varactor diodes, that are controlled by the CPU via the D/A converter (IC6), to track the bandpass filter. These varactor diodes tune the center frequency of an RF pass band for wide bandwidth receiving and good image response rejection.

4-1-3 1ST MIXER AND 1ST IF CIRCUITS (MAIN UNIT)

The 1st mixer circuit converts the received signal into fixed frequency of the 1st IF signal with the PLL output frequency. By changing the PLL frequency, only the desired frequency passes through a crystal filter at the next stage of the 1st mixer.

The RF signals from the bandpass filter are mixed with the 1st LO signals, where come from the RX VCO circuit via the low-pass filter (L38, C363, C364), at the 1st mixer circuit (Q3) to produce a 46.35 MHz 1st IF signal. The 1st IF signal is passed through a monolithic filter (FI1) in order to obtain selection capability and to pass only the desired signals. The filtered signal is applied to the 2nd IF circuit after being amplified at the 1st IF amplifier (Q4).

4-1-4 2ND IF AND DEMODULATOR CIRCUITS (MAIN UNIT)

The 2nd mixer circuit converts the 1st IF signal into a 2nd IF signal. The double-conversion superheterodyne system (which convert receive signals twice) improves the image rejection ratio and obtains stable receiver gain.

The 1st IF signal from the IF amplifier (Q4) is applied to the 2nd mixer section of the FM IF IC (IC1, pin 16), and is mixed with the 2nd LO signal to be converted into a 450 kHz 2nd IF signal.

The FM IF IC (IC1) contains the 2nd mixer, 2nd local oscillator, limiter amplifier, quadrature detector, active filter and noise amplifier circuits. A 2nd LO signal (45.9 MHz) is produced at the PLL circuit by tripling it's reference frequency (15.3 MHz).

The 2nd IF signal from the 2nd mixer (IC1, pin 3) passes through the ceramic filter (FI2) to remove unwanted heterodyned frequencies. It is then amplified at the limiter amplifier section (IC1, pin 5) and applied to the quadrature detector section (IC1, pins 10, 11) to demodulate the 2nd IF signal into AF signals.

The demodulated AF signals are output from pin 9 (IC1) and applied to the AF circuit via the receiver mute circuit.

• 2ND IF AND DEMODULATOR CIRCUITS

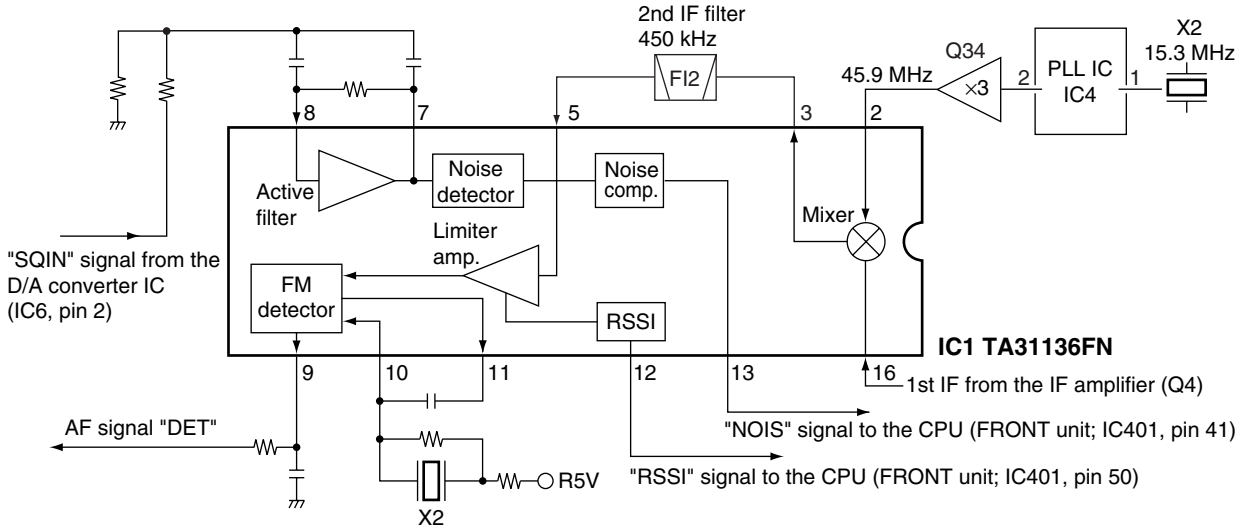

4-1-5 AF AMPLIFIER CIRCUIT (MAIN AND FRONT UNITS)

The AF amplifier circuit amplifies the demodulated AF signals to drive a speaker. This transceiver employs the base band IC which is composed of pre-amplifier, expander, scrambler, MSK de-modulator, etc. at the AF amplifier section.

The AF signals from the FM IF IC (IC1, pin 9) are amplified at the AF amplifier section of the base band IC (IC10, pin 23) and are then applied to the low-pass filter section of it.

The filtered signals passes through the high-pass filter to suppress unwanted harmonic components. The signals pass through (or bypass) scrambler and expander sections, and are then applied to (or bypass) the scrambler IC (IC14) via the analog switch (IC13). The signals are amplified at the amplifier section of the base band IC (IC10), and pass through the AF mute switch (IC406) and low-pass filter (IC403). The filtered signals pass through the AF volume, and are then applied to the AF power amplifier (IC405) to drive the speaker.

4-1-6 RECEIVE MUTE CIRCUITS (MAIN AND FRONT UNITS)

• NOISE SQUELCH

A squelch circuit cuts out AF signals when no RF signals are received. By detecting noise components in the AF signals, the squelch circuit switches the AF mute switch.

Some noise components in the AF signals from the FM IF IC (IC1, pin 9) are passed through the D/A converter (IC6, pin 1). The signals are applied to the active filter section in the FM IF IC (IC1, pin 8). Noise components about 10 kHz are amplified and output from pin 7.

The filtered signals are converted into the pulse-type signals at the noise detector section and output from pin 13 (NOIS).

The “NOIS” signal from the FM IF IC is applied to the CPU (FRONT unit; IC401, pin 41). Then the CPU analyzes the noise condition and controls the AF mute signal via “AFON” line from expander IC (FRONT unit; IC410, pin 7) to the AF power controller (FRONT unit; Q401, Q402).

• CTCSS AND DTCS

The tone squelch circuit detects AF signals and opens the squelch only when receiving a signal containing a matching subaudible tone (CTCSS or DTCS). When tone squelch is in use, and a signal with a mismatched or no subaudible tone is received, the tone squelch circuit mutes the AF signals even when noise squelch is open.

A portion of the “DET” AF signals from the FM IF IC (IC1, pin 9) passes through the low-pass filter (IC5, pin 5) to remove AF (voice) signals, and are then applied to the amplifier (MAIN unit; IC5, pin 10). The amplified signals are applied to the CTCSS or DTCS decoder inside of the CPU (FRONT unit; IC401, pin 44) via the “CDEC” line. The CPU outputs AF mute control signal, and is then applied to the I/O expander IC (FRONT unit; IC410). The IC outputs AF mute circuit (FRONT unit; IC406) and AF power supply circuits (FRONT unit; Q401, Q402) control signals via the “AFON” line.

4-2 TRANSMITTER CIRCUITS

4-2-1 MICROPHONE AMPLIFIER CIRCUIT (FRONT AND MAIN UNITS)

The microphone amplifier circuit amplifies audio signals within +6 dB/octave pre-emphasis characteristics from the microphone to a level needed for the modulation circuit.
This transceiver employs the base band IC which is composed of microphone amplifier, compressor, scrambler, limiter, splatter filter, MSK modulator, etc. at the microphone amplifier section.

The AF signals (MIC) from the microphone (MC401) are passed through the microphone mute switch (IC406, pins 2, 1), and are then applied to the amplifier (IC407, pins 2, 6). The amplified signals pass through (or bypass) the scrambler IC (MAIN unit; IC14) via the analog switch (MAIN unit; IC13), and are then applied to the microphone amplifier section of the base band IC (MAIN unit; IC10, pins 3, 4). The amplified signals are passed through or bypass the compressor, scrambler sections of IC10 (MAIN unit), and are then passed through the high-pass, limiter amplifier, splatter filter sections of IC10 (MAIN unit).

• AF AMPLIFIER AND MICROPHONE AMPLIFIER CIRCUITS

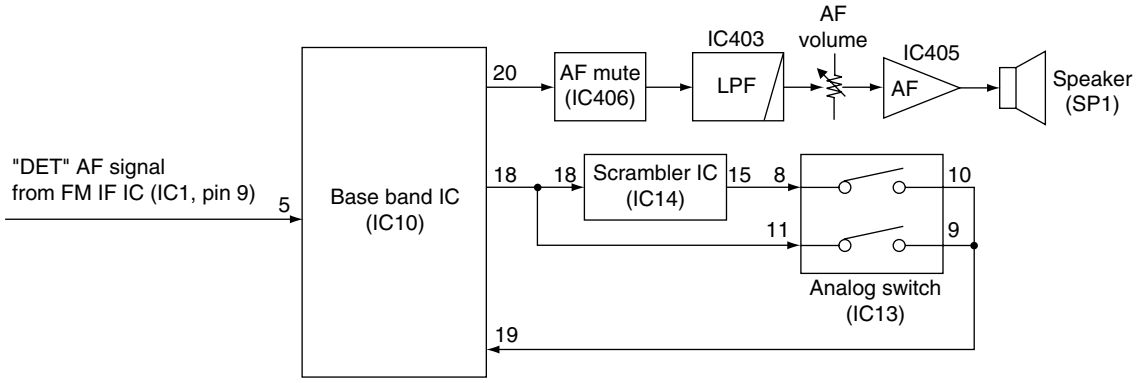

The filtered AF signals are applied to the FM/PM switch (MAIN unit; IC11, pin 6), and pass through the low-pass filter (MAIN unit; IC5, pin 1). The amplified signals are applied to the D/A converter (MAIN unit; IC6, pin 4)
The output signals from the D/A converter (MAIN unit; IC6, pin 3) are applied to the modulation circuit (MAIN unit; D18).

4-2-2 MODULATION CIRCUIT (MAIN UNIT)

The modulation circuit modulates the VCO oscillating signal (RF signal) using the microphone audio signals.

The AF signals from the D/A converter (IC6, pin 3) change the reactance of varactor diode (D18) to modulate the oscillated signal at the TX VCO circuit (Q14, D17). The modulated VCO signal is amplified at the buffer amplifiers (Q10, Q11) and is then applied to the drive amplifier circuit via the T/R switch (D14).

The CTCSS/DTCS signals (“CENC0”, “CENC1”, ”CENC2” from the CPU (FRONT unit; IC401, pins 79–81) pass through the low-pass filter (IC403, pins 1, 3), and are then applied to the D/A converter via the “CDCS” line (IC6, pin 9). The output signal from the D/A converter (IC6, pin 10) passes through the low-pass filter (IC5, pins 1, 2). The CTCSS/DTCS signals are mixed with “MOD” signal at the low-pass filter (IC5), and are then applied to the D/A converter again (IC6, pin 4).

4-2-3 DRIVE/POWER AMPLIFIER CIRCUITS

The drive/power amplifier circuits amplify the VCO oscillating signal to an output power level.

The signal from the VCO circuit passes through the T/R switch (D14), and is amplified at the YGR (Q5, Q9), drive (Q8), power (Q7) amplifiers to obtain 4 W of RF power (at 7.2 V DC).

The amplified signal is passed through the low-pass filter (L4, C12, C13, C16), power detector (D1, D39), antenna switching circuit (D2) and other low-pass filter (L1, L2, L45, C1–C5, C365), and is then applied to the antenna connector (CHASSIS unit; J1).

The bias current of the drive (Q8) and power (Q7) amplifiers are controlled by the APC circuit.

4-2-4 APC CIRCUIT (MAIN UNIT)

The APC circuit (IC2, D1, D39) protects the drive and power amplifiers from excessive current drive, and selects output power of HIGH, LOW2 or LOW1.
The power detector circuit (D1, D39) detects the transmit power output level and converts it into DC voltage. The output voltage is at a minimum level when the antenna impedance is matched at 50 Ω and is increased when it is mismatched.

The detected voltage is applied to the differential amplifier (IC2, pin 3), and the “T2” signal from the D/A converter (IC6, pin 14), controlled by the CPU (FRONT unit; IC401), is applied to the other input for reference. When antenna impedance is mismatched, the detected voltage exceeds the power setting voltage. Then the output voltage of the differential amplifier (IC2, pin 4) controls the input current of the drive (Q8) and power (Q7) amplifiers to reduce the output power.

4-3 PLL CIRCUITS

4-3-1 PLL CIRCUIT (MAIN UNIT)

A PLL circuit provides stable oscillation of the transmit frequency and receive 1st LO frequency. The PLL output compares the phase of the divided VCO frequency to the reference frequency. The PLL output frequency is controlled by the divided ratio (N-data) of a programmable divider.

The PLL circuit contains the TX/RX VCO circuits (Q13, Q14, D16, D17). The oscillated signal is amplified at the buffer amplifiers (Q11, Q12) and then applied to the PLL IC (IC4, pin 8) after being passed through the low-pass filter (L32, C206, C208).

The PLL IC contains a prescaler, programmable counter, programmable divider and phase detector, etc. The entered signal is divided at the prescaler and programmable counter section by the N-data ratio from the CPU. The divided signal is detected on phase at the phase detector using the reference frequency.

If the oscillated signal drifts, its phase changes from that of the reference frequency, causing a lock voltage change to compensate for the drift in the oscillated frequency.

• APC CIRCUIT

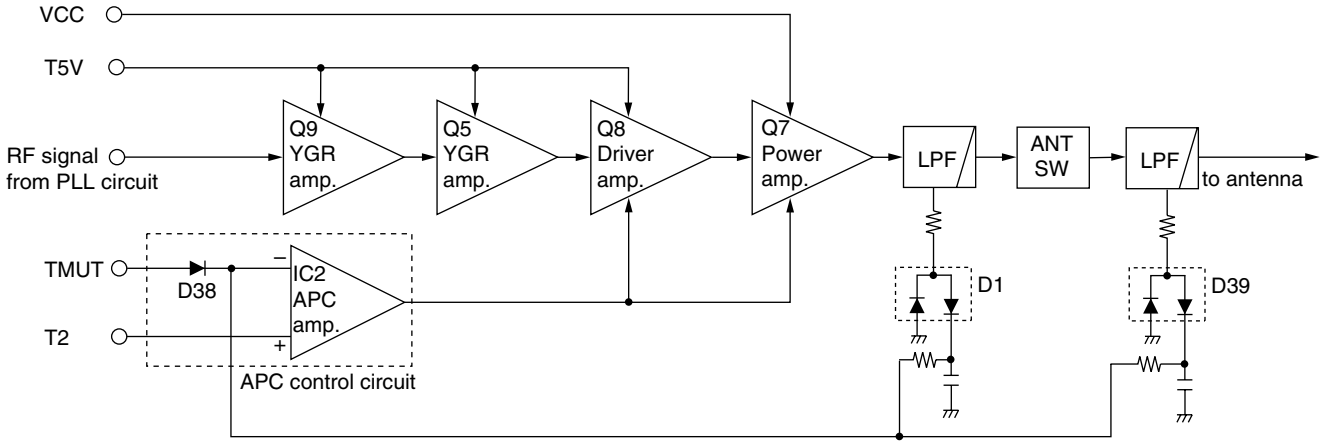

4-3-2 VCO CIRCUIT (MAIN UNIT)

The VCO circuit contains a separate RX VCO (Q13, D16) and TX VCO (Q14, D17). The oscillated signal is amplified at the buffer amplifiers (Q10, Q11) and is then applied to the T/R switch (D14, D15). Then the receive 1st LO (Rx) signal is applied to the 1st mixer (Q3) and the transmit (Tx) signal to the YGR amplifier circuit (Q9).

A portion of the signal from the buffer amplifier (Q11) is fed back to the PLL IC (IC4, pin 8) via the buffer amplifier (Q12) as the comparison signal.

4-4 POWER SUPPLY CIRCUIT

4-4-1 MAIN UNIT VOLTAGE LINE

LINE	DESCRIPTION
VCC	The voltage from the connected battery pack.
+5V	Common 5 V converted from the VCC line at the +5 regulator circuit (IC9). The output voltage is supplied to buffer amplifiers (Q18), FRONT unit, etc.
S5V	Common 5 V converted from the VCC line at the S5 regulator circuit (Q23–Q25). The output voltage is supplied to the ripple filter (Q17), PLL IC (IC4), FRONT unit, etc.
R5V	Receive 5 V converted from the S5V line at the R5 regulator circuit (Q22). The output voltage is supplied to the tripler (Q34), FM IF IC (IC1), IF amplifier (Q4), VCO switch (Q15, Q16), 1st mixer (Q3), etc.
T5V	Transmit 5 V converted from the S5V line at the T5 regulator circuit (Q21). The output voltage is supplied to the YGR amplifier (Q5, Q9), drive amplifier (Q8), APC amplifier (IC2), etc..

4-4-2 FRONT UNIT VOLTAGE LINE

LINE	DESCRIPTION
VCC	Same voltage as VCC line on the MAIN unit is applied to the FRONT unit via the J401, pins 1, 2 (FRONT unit). The voltage is supplied to the [PWR] switch controller (Q401, Q402).
CPU5	Same voltage as +5V line on the MAIN unit is applied to the FRONT unit via the J401, pin 4 (FRONT unit). The voltage is supplied to the CPU (IC401), reset IC (IC408), etc.
S5V	Same voltage as S5V line on the MAIN unit is applied to the FRONT unit via the J401, pin 5 (FRONT unit). The voltage is supplied to the mic mute circuit (IC406), AF mute circuit (Q403-Q406, IC406),etc.

• PLL CIRCUIT

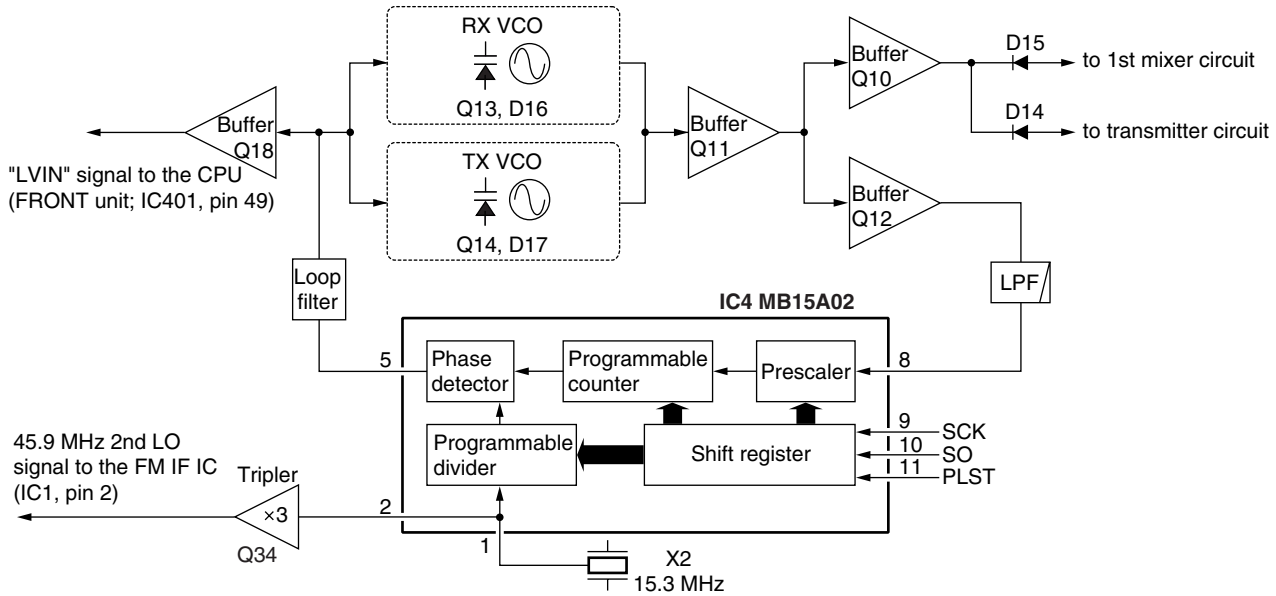

4-5 OTHER CIRCUITS

4-5-1 COMPOUNDER CIRCUIT (MAIN UNIT)

IC-F60/F61 have compounder circuit which can improve S/N ratio and become wide dynamic range to suppress the transmitting signal and to extend receiving signal. The circuit is composed of the base band IC (MAIN unit; IC10).

(1) IN CASE OF TRANSMITTING

The audio signals from the microphone are applied to the base band IC (IC10, pin 3) via microphone mute circuit (FRONT unit; IC406), microphone amplifier (IC407), etc. The signals are amplified at the amplifier section, and are then applied to the compressor circuit to compress the audio signals. The signals pass through (or bypass) scrambler section, and are then amplified at limiter amplifier section after being passed through the high-pass filter. The amplified signals pass through the low-pass filter section, and are then applied to the modulation circuit (Q13, D16–D18) via the FM/PM switch (IC11), low-pass filter (IC5) and D/A converter (IC6).

(2) IN CASE OF RECEIVING

The demodulated AF signals from the IF IC are applied to the amplifier section of base band IC (IC10, pin 23), and then pass through the low-pass and high-pass filter section to suppress unwanted signals. The filtered signals pass through (or bypass) scrambler section, and are then applied to the expander circuit to expand AF signals. The signals pass through (or bypass) scrambler IC (IC14), and are then applied to the analog switch (IC13, pins 8, 11). The signals are applied to the base band IC's amplifier section (IC10, pins 19, 20), and are then applied to the AF amplifier circuit.

4-6 PORT ALLOCATIONS

4-6-1 EXPANDER IC (FRONT UNIT; IC410)

Pin number	Port name	Description
4	LEDR	Outputs RX LED control signal. Low: Lights ON.
5	LEDT	Outputs TX LED control signal. Low: Lights ON.
6	LIGT	Outputs back light LED control signal. Low: Back light is ON.
7	AFON	Outputs audio control signal. Low: Outputs audio signals from speaker.
11	DUSE	• Outputs CTCSS/DTCS switching signal when transmitting. High: Selected DTCS. • Outputs Min. VR switching signal when receiving. Low: Select Min VR. **NOTE:** Audio signals are prior to transmitting.
12	MCON	Outputs microphone select signal. High: While the internal microphone is used.
13	CSFT	Outputs shift signal for reference oscillator's frequency.
14	SPON	Outputs the internal speaker control signal. High: The internal speaker is selected.

• BASE BAND IC BLOCK DIAGRAM

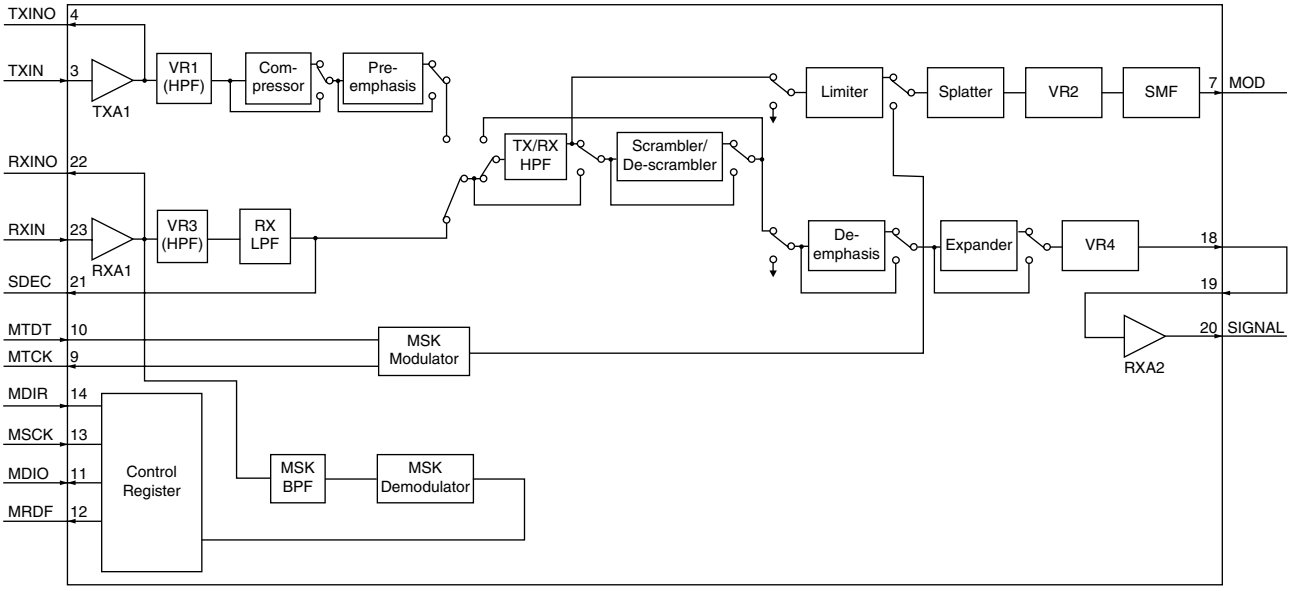

4-6-2 CPU (FRONT unit; IC401)

Pin number	Port name	Description
1–11, 13, 15–25,	SEG23–SEG13, SEG12, SEG11–SEG1	Output segment data to the LCD display.
26	SO	Outputs serial data to the PLL IC (MAIN unit; IC4, pin 10) and D/A convertor (MAIN unit; IC6, pin 8).
27	SCK	Outputs serial clock signal to the PLL IC (MAIN unit; IC4, pin 9), D/A convertor (MAIN unit; IC6, pin 7), etc.
28	MDIO	I/O port for the serial data signals from/to the base band IC (MAIN unit; IC10, pin 11).
29	MSCK	Outputs clock signal to the base band IC (MAIN unit; IC10, pin 13).
30	SCST	Outputs strobe signals to the scrambler IC (MAIN unit; IC14, pin 11).
31	PLST	Outputs strobe signals to the PLL IC (MAIN unit; IC4, pin 11).
32	ESDA	I/O port for data signals from/to the EEPROM (IC409, pin 5).
33	ESCL	Outputs clock signal to the EEPROM (IC409, pin 6).
34	SCAT	• Outputs power down control signal to the scrambler IC (MAIN unit; IC14, pin 12). • Input port for the detection signal whether the scrambler unit is installed or not.
35	EXSF	Outputs strobe signals to the expander IC (IC410, pin 2).
36	EXSM	Outputs strobe signals to the expander IC (MAIN unit; IC12, pin 1).
37	EXOE	Outputs the enable signal to the expander ICs (IC410, pin 15 and MAIN unit; IC12, pin 15).
38	BEEP	Outputs beep audio signals.
39	MTDT	Outputs MSK data for transmitting to the base band IC (MAIN unit; IC10, pin 10).
40	MTCK	Input port for the transmitting MSK clock signal from the base band IC (MAIN unit; IC10, pin 9).
41	NOIS	Input port for the noise signal from the FM IF IC (MAIN unit; IC1, pin 13).
43	SDEC	Input port for single tone decode signal from the base band IC (MAIN unit; IC10, pin 21).
44	CDEC	Input port for CTCSS/DTCS signal from the amplifier (MAIN unit; IC5, pin 8).

Pin number	Port name	Description
45	PTT	Input port for the PTT switch detection signal. Low: While the PTT switch is pushed.
46 47	KR1 KR0	Input ports for the key return A/D signals.
48	BATV	Input port for the detect signal for connecting battery pack's voltage.
49	LVIN	Input port for the PLL lock voltage.
50	RSSI	Input port for the S-meter signal from the FM IF IC (MAIN unit; IC1, pin 12).
51	TEMP	Input port for the transceiver's internal temperature detecting signal.
52	OPTV	Input port for the optional microphone determine signal.
55	ULCK	Input port for the PLL unlock signal. Low: The PLL circuit is unlocked.
71	MDIR	Outputs serial data control signal to the base band IC (MAIN unit; IC10, pin 14)
72–75	SENC3–SENC0	Output single tone encoder signal.
76	CLO	Outputs the cloning data signal.
77	CLI	Input port for the cloning data signal.
78	MRDF	Input port for the receiving MSK detection signal from the base band IC (MAIN unit; IC10, pin 12)
79–81	CENC2–CENC0	Output the CTCSS/DTCS signals.
82	DAST	• Outputs strobe signals to the D/A convertor (MAIN unit; IC6, pin 6). • Input port for the connecting battery type detect signal.
88–91	COM4–COM1	Output common signal to the LCD display.

4-6-3 EXPANDER IC (FRONT UNIT; IC410)

Pin number	Port name	Description
4	LEDR	Outputs RX LED control signal. Low: Lights ON.
5	LEDT	Outputs TX LED control signal. Low: Lights ON.
6	LIGT	Outputs back light LED control signal. Low: Back light is ON.
7	AFON	Outputs audio control signal. Low: Outputs audio signals from speaker.
11	DUSE	• Outputs CTCSS/DTCS switching signal when transmitting. High: Selected DTCS. • Outputs Min. VR switching signal when receiving. Low: Select Min VR. **NOTE:** Audio signals are prior to transmitting.
12	MCON	Outputs microphone select signal. High: While the internal microphone is used.
13	CSFT	Outputs shift signal for reference oscillator's frequency.
14	SPON	Outputs the internal speaker control signal. High: The internal speaker is selected.

4-6-4 D/A CONVERTER IC (MAIN UNIT; IC6)

Pin number	Port name	Description
11	BAL	Outputs the modulation balance level control signal. The signal is applied to the buffer amplifier (IC5, pin 13).
14	T2	• Outputs the bandpass filter tuning signal. The output signal is applied to the bandpass filters (D9, D10). • Outputs the TX power control signal. The output signal is applied to the APC amplifier (IC2, pin 1).
15	T1	Outputs the bandpass filter tuning signal. The output signal is applied to the bandpass filters (D3, D4, D7, D8).
22	LVA	Outputs the PLL lock voltage control signal.
23	REF	Outputs the reference oscillator correcting voltage. The voltage is applied to the buffer amplifier (IC5, pin 12).

4-6-5 EXPANDER IC (MAIN UNIT; IC12)

Pin number	Port name	Description
4	R5C	Outputs the R5 regulator (Q22) control signal. Low: While receiving.
5	T5C	Outputs the T5 regulator (Q21) control signal. Low: While transmitting.
7	S5C	Outputs the S5 regulator (Q23–Q25) control signal. Low: While the S5 regulator outputs 5 V voltage.
11	MUT2	Outputs the analog switch (IC13, pins 5, 6) control signal to control the scrambler unit. High: While the scrambler function is ON. Low: While the microphone mute or AF mute is ON.
12	MUT1	Outputs the analog switch (IC13, pins 12, 13) control signal to control the scrambler unit. High: While the scrambler function is ON. Low: While the microphone mute or AF mute is ON.
13	PMFM	Outputs the FM/PM modulation switching signal to the FM/PM switch (IC11, pin 5). High: PM is selected.
14	TMUT	Outputs the transmitting mute switch control signal to the mute switch (D38). High: While muting.

SECTION 5 ADJUSTMENT PROCEDURES

5-1 PREPARATION

When adjusting IC-F60/F61, the optional CS-F50 ADJ ADJUSTMENT SOFTWARE (Rev. 1.0 or later), *OPC-966 JIG CABLE (modified OPC-966 CLONING CABLE) are required.

■ REQUIRED TEST EQUIPMENT

EQUIPMENT	GRADE AND RANGE	EQUIPMENT	GRADE AND RANGE
DC power supply	Output voltage : 7.2 V DC Current capacity : 3 A or more	Audio generator	Frequency range : 300–3000 Hz Output level : 1–500 mV
FM deviation meter	Frequency range : DC–600 MHz Measuring range : 0 to ±10 kHz	Attenuator	Power attenuation : 40 or 50 dB Capacity : 10 W or more
Frequency counter	Frequency range : 0.1–600 MHz Frequency accuracy : ±1 ppm or better Sensitivity : 100 mV or better	Standard signal generator (SSG)	Frequency range : 300–600 MHz Output level : 0.1 µV to 32 mV (–127 to –17 dBm)
Digital multimeter	Input impedance : 10 MΩ/V DC or more	DC voltmeter	Input impedance : 50 kΩ/V DC or more
RF power meter (terminated type)	Measuring range : 1–10 W Frequency range : 300–600 MHz Impedance : 50 Ω SWR : Less than 1.2 : 1	Oscilloscope	Frequency range : DC–20 MHz Measuring range : 0.01–20 V
		AC millivoltmeter	Measuring range : 10 mV to 10 V

■ SYSTEM REQUIREMENTS

- Microsoft® Windows® 95/98/ME
- RS-232C serial port (DB9)

■ ADJUSTMENT SOFTWARE INSTALLATION

① Boot up Windows.
 - Quit all applications when Windows is running.
② Insert the cloning software CD-ROM into the appropriate CD-ROM drive.
③ Select 'Run' from the [Start] menu.
④ Type the setup program name using the full path name, then push [Enter] key.
 (For example; D:\Setup.exe)
⑤ Follow the prompts.
⑥ Program group 'CS-F50 ADJ' appears in the 'Programs' folder of the [Start] menu.

■ BEFORE STARTING SOFTWARE ADJUSTMENT

Clone the adjustment frequencies, listed in page 5-2, into the transceiver using with the CS-F50 before starting the software adjustment. Otherwise, the transceiver can not start software adjustment.

CAUTION!: BACK UP the originally programed memory data in the transceiver before progaming the adjustment frequencies.
When program the adjustment frequencies into the transceiver, the transceiver's memory data will be overwritten and lose original memory data at the same time.

■ STARTING SOFTWARE ADJUSTMENT

① Connect IC-F60/F61 and PC with *OPC-966 JIG CABLE.
② Turn the transceiver power ON.
③ Boot up Windows, and click the program group 'CS-F50 ADJ' in the 'Programs' folder of the [Start] menu, then CS-F50 ADJ's window appears.
④ Click 'Connect' on the CS-F50's window, then appears IC-F60/F61's up-to-date condition.
⑤ Set or modify adjustment data as desired.

Microsoft and Windows are registered trademarks of Microsoft Corporation in the U.S.A. and other countries.

• PC SCREEN EXAMPLE

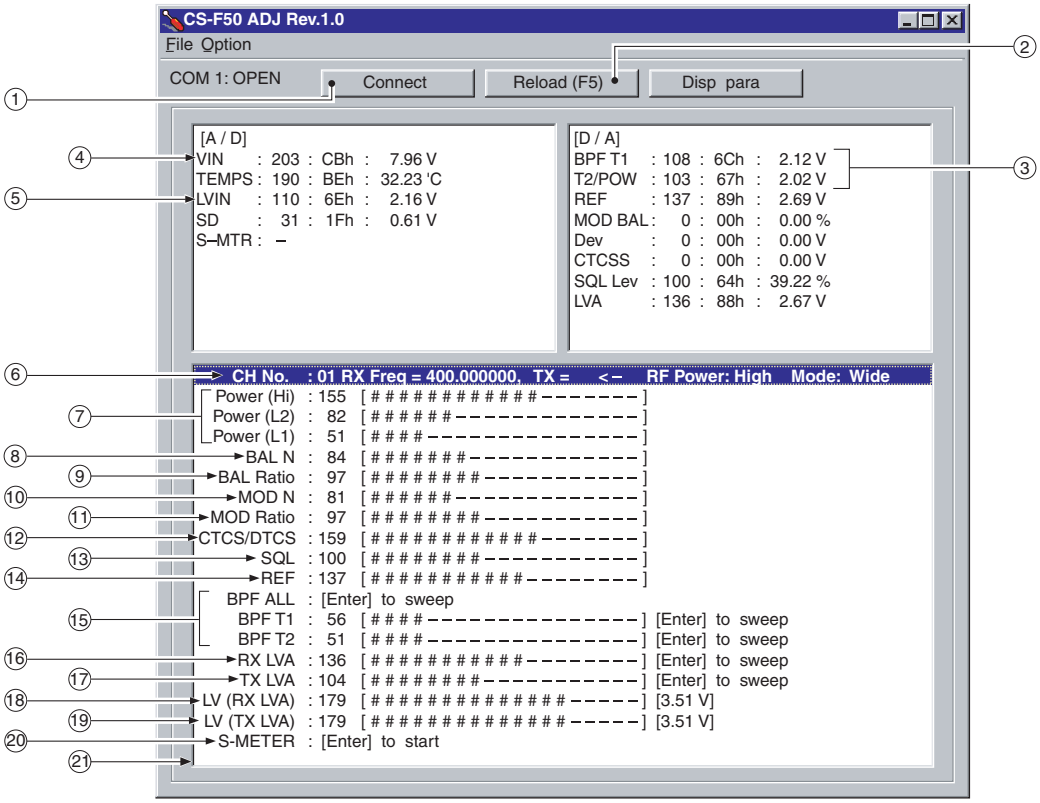

NOTE: The above values for settings are example only.
Each transceiver has its own specific values for each setting.

① : Transceiver's connection state
② : Reload adjustment data
③ : Receive sensitivity measurement
④ : Connected DC voltage measurement
⑤ : PLL lock voltage measurement
⑥ : Operating channel select
⑦ : RF output power
⑧ : FM deviation balance (Narrow)
⑨ : FM deviation balance (Wide)
⑩ : FM deviation (Narrow)
⑪ : FM deviation (Wide/Middle)
⑫ : CTCSS/DTCS deviation
⑬ : Squelch level
⑭ : Reference frequency
⑮ : Receive sensitivity (automatically)
⑯ : PLL lock voltage for RX (automatically)
⑰ : PLL lock voltage for TX (automatically)
⑱ : PLL lock voltage for RX (manually)
⑲ : PLL lock voltage for TX (manually)
⑳ : S-meter
㉑ : Adjustment items

• ADJUSTMENT FREQUENCY LIST

CH	FREQUENCY		ADJUSTMENT ITEM	CH	FREQUENCY		ADJUSTMENT ITEM
	LOW BAND	HIGH BAND			LOW BAND	HIGH BAND	
1	400.000 MHz	450.000 MHz	TX power : Hi	8	435.000 MHz	485.000 MHz	TX power : L1 DTCS code : 007 Band width : Middle
2	400.000 MHz	450.000 MHz	TX power : L2				
3	400.000 MHz	450.000 MHz	TX power : L1 Band width : Wide	9	435.000 MHz	485.000 MHz	TX power : L1 DTCS code : 007 Band width : Wide
4	435.000 MHz	485.000 MHz	TX power : L1 Band width : Middle				
5	435.000 MHz	485.000 MHz	TX power : L1 Band width : Middle	10	435.000 MHz	485.000 MHz	TX power : L1 CTCSS : 151.4 Hz DTCS code : 007 Band width : Wide
6	435.000 MHz	485.000 MHz	TX power : L1 Band width : Wide				
7	435.000 MHz	485.000 MHz	TX power : L1 DTCS code : 007 Band width : Narrow	11	470.000 MHz	452.000 MHz	TX power : L1 Band width : Wide
				12	400.000 MHz	485.000 MHz	TX power : L1 Band width : Wide

• **CONNECTION**

to the antenna connector

Standard signal generator
0.1 µV to 32 mV
(–127 dBm to –17 dBm)

FM
deviation meter

Attenuator
40 dB or 50 dB

RF power meter
0.1–10 W/50 Ω

Frequency
counter

CAUTION!
DO NOT transmit while to SSG is connected to the antenna connector

Personal
computer

to an RS-232C port

IC-F60/F61

AC millivoltmeter

Audio generator

SINAD meter

DB9 female plug
(incl. level converter circuit)

RS-232C cable (straight)

*OPC-966
(JIG CABLE)

Speaker (8 Ω)

• ***OPC-966 (JIG CABLE)**

Add a jumper wire here

OPC-966
(Cloning cable)

Electrolytic capacitor
47 µF

PTTE
PTT
MIC
MICE
SP–
SP+

Audio generator
300 Hz to 3 kHz

AC
millivoltmeter

5-2 SOFTWARE ADJUSTMENT (TRANSMITTING)

Select an operation using [↑] / [↓] keys, then set specified value using [←] / [→] keys on the connected computer keyboard.

ADJUSTMENT		ADJUSTMENT CONDITION	MEASUREMENT		VALUE
			UNIT	LOCATION	
PLL LOCK VOLTAGE [LV (RX LVA)] [LV (TX LVA)]	1	• Operating CH : CH3 • Receiving	MAIN	Check the "LV" item on the CS-F50 ADJ's screen.	1.0 V
	2	• Operating CH : CH3 • Transmitting		Check the "TX LV" item on the CS-F50 ADJ's screen.	1.0 V
	3	• Operating CH : CH11 • Receiving	MAIN	Check the "LV" item on the CS-F50 ADJ's screen.	3.3–4.5 V (Verify)
	4	• Operating CH : CH11 • Transmitting		Check the "TX LV" item on the CS-F50 ADJ's screen.	3.3–4.5 V (Verify)
	1	• Operating CH : CH11 • Output power : Low1 • Connect an RF power meter or 50 Ω dummy load to the antenna connector. • Transmitting	Top panel	Loosely couple a frequency counter to the antenna connector.	470.0000 MHz [L] 520.0000 MHz [H] ±300 Hz
OUTPUT POWER [Power (Hi)]	1	• Operating CH : CH1 • Transmitting	Top panel	Connect an RF power meter to the antenna connector.	4.0 W
[Power (L2)]	2	• Operating CH : CH2 • Transmitting			2.0 W
[Power (L1)]	3	• Operating CH : CH3 • Transmitting			1.0 W
FM DEVIATION [MOD N] (Narrow)	1	• Operating CH : CH4 • Set the FM deviation meter as: HPF : OFF LPF : 20 kHz De-emphasis : OFF Detector : (P–P)/2 • Connect the audio generator to the multi connector through the JIG cable (*OPC-966) and set as: : 1.0 kHz/150 mVrms • Transmitting	Top panel	Connect an FM deviation meter to the antenna connector through the attenuator.	±2.05 to ±2.15 kHz
[MOD Ratio] (Middle)	2	• Operating CH : CH5 • Transmitting			±3.15 to ±3.25 kHz
[MOD Ratio] (Wide)	3	• Operating CH : CH6 • Transmitting			±4.05 to ±4.15 kHz

SOFTWARE ADJUSTMENT (TRANSMITTING) – continued

Select an operation using [↑] / [↓] keys, then set specified value using [←] / [→] keys on the connected computer keyboard.

ADJUSTMENT		ADJUSTMENT CONDITION	MEASUREMENT		VALUE
			UNIT	LOCATION	
MODULATION BALANCE [BAL N] (Narrow)	1	• Operating CH : CH7 • No audio applied to the multi connector. • Set an FM deviation meter as: HPF : OFF LPF : 20 kHz De-emphasis : OFF Detector : (P–P)/2 • IF bandwidth : Narrow • Transmitting	Top panel	Connect an FM deviation meter with an oscilloscope to the antenna connector through an attenuator.	Set to square wave form
[BAL Ratio] (Middle)	2	• Operating CH : CH8 • Transmitting			
[BAL Ratio] (Wide)	3	• Operating CH : CH9 • Transmitting	Top panel	Connect an FM deviation meter to the antenna connector through the attenuator.	±0.66 to ±0.70 kHz
CTCSS/DTCS DEVIATION [CTCS/DTCS]		• Operating CH : CH10 • No audio applied to the multi connector. • Transmitting			

5-3 SOFTWARE ADJUSTMENT (RECEIVING)

• Select an operation using [↑] / [↓] keys, then set specified value using [←] / [→] keys on the connected computer keyboard.
• Need to adjust "S-METER ADJUSTMENT" after "RX SENSITIVITY ADJUSTMENT" is adjusted.
Otherwise, "S-METER ADJUSTMENT" will not be adjusted properly.

ADJUSTMENT		ADJUSTMENT CONDITION	MEASUREMENT		VALUE
			UNIT	LOCATION	
RX SENSITIVITY [BPF T1], [BPF T2]	1	• Operating CH : CH3 • Connect a standard signal generator to the antenna connector and set as: Frequency : 400.000 MHz [L] 485.000 MHz [H] Level : 10 μV* (–87 dBm) Modulation : 1 kHz Deviation : ±3.5 kHz • Receiving	MAIN	Connect a SINAD meter with an 8 Ω load to the multi connector through the JIG cable (*OPC-966).	Minimum distortion level
		CONVENIENT: The BPF T1, BPF T2 can be adjusted automatically. ①-1: Set the cursor to "BPF ALL" on the adjustment program and then push [ENTER] key. ①-2: The connected PC tunes BPF T1, BPF T2 to peak levels. or ②-1: Set the cursor to one of BPF T1, T2 as desired. ②-2: Push [ENTER] key to start tuning. ②-3: Repeat ②-1 and ②-2 to perform additional BPF tuning.			
S-METER [S-METER]	1	• Operating CH : CH3 • Connect an SSG to the antenna connector and set as: Frequency : 400.000 MHz [L] 485.000 MHz [H] Level : 4.5 μV* (–94 dBm) Modulation : 1 kHz Deviation : ±3.5 kHz • Receiving	Push the [ENTER] key on the connected computer's keyboard to set "S6 level".		
	2	• Set an SSG as : Level : 0.25 μV* (–119 dBm) Modulation : 1 kHz Deviation : ±3.5 kHz • Receiving	Push the [ENTER] key on the connected computer keyboard to set "S1 level".		
SQUELCH LEVEL [SQL]	1	• Operating CH : CH11 • Connect an SSG to the antenna connector and set as: Frequency : 470.000 MHz [L] 520.000 MHz [H] Level : 0.2 μV* (–121 dBm) Modulation : 1 kHz Deviation : ±3.5 kHz • Receiving	Front panel	Internal speaker	Set "SQL level" to close squelch. Then set "SQL level" at the point where the audio signals just appears.

*The output level of the standard signal generator (SSG) is indicated as the SSG's open circuit.

SECTION 6 PARTS LIST

[MAIN UNIT]

REF NO.	ORDER NO.	DESCRIPTION	M.	H/V LOCATION
IC1	1110003200	S.IC TA31136FN (EL)	B	13.6/8.1
IC2	1130008560	S.IC TC75S51F (TE85L)	T	52.3/17.1
IC4	1140005990	S.IC MB15A02PFV1-G-BND-ER	B	28.7/24.1
IC5	1110002751	S.IC TA75S01F F	T	30.4/9.7
IC6	1190000350	S.IC M62363FP-650C	T	19.7/8.9
IC7	1190001860	S.IC EW-460-FT	B	50.7/39.9
IC9	1110005350	S.IC NJM2870F05-TE1	T	73.7/28.5
IC10	1110006220	S.IC AK2346-E2	T	18.9/19.6
IC11	1130006220	S.IC TC4W53FU (TE12L)	T	25.2/25
IC12	1130007570	S.IC BU4094BCFV-E2	T	16.9/32.2
IC13	1130008090	S.IC BU4066BCFV-E1	T	22.7/32.2
IC14	1110004990	S.IC FX214LG/TR	B	9.8/32.5
IC15	1130007990	S.IC TC3W03FU (TE12L)	B	22.5/33.4
Q1	1560000840	S.FET 2SK1829 (TE85R)	T	46.4/10.8
Q2	1580000730	S.FET 3SK293 (TE85L)	T	47.3/8.2
Q3	1580000760	S.FET 3SK299-T1 U73	B	42/9.3
Q4	1530002600	S.TR 2SC4215-O (TE85R)	B	21.3/4.5
Q5	1530000371	S.TR 2SC3356-T1B S (R25)	B	53.5/30.6
Q7	1560001230	S.FET RD07MVS1	T	59.8/21.9
Q8	1560001240	S.FET RD01MUS1	T	60.2/28
Q9	1530003310	S.TR 2SC5107-O (TE85R)	B	53.2/24.4
Q10	1530003310	S.TR 2SC5107-O (TE85R)	B	48/23.2
Q11	1530003310	S.TR 2SC5107-O (TE85R)	B	46.1/26.6
Q12	1530003310	S.TR 2SC5107-O (TE85R)	B	48/31.9
Q13	1530002920	S.TR 2SC4226-T1 R25	B	42.4/29.1
Q14	1530002920	S.TR 2SC4226-T1 R25	B	43/24.3
Q15	1590001400	S.TR XP1214 (TX)	T	47.5/27.2
Q16	1590000430	S.TR DTC144EUA T106	T	47.2/29.9
Q17	1530002850	S.TR 2SC4116-BL (TE85R)	B	46.4/37.8
Q18	1560000540	S.FET 2SK880-Y (TE85R)	T	34.2/21.6
Q21	1510000920	S.TR 2SA1577 T106 Q	B	53/36.5
Q22	1510000920	S.TR 2SA1577 T106 Q	B	34.5/37.9
Q23	1520000450	S.TR 2SB1132 T100 Q	B	71.8/25.4
Q24	1590001190	S.TR XP6501-(TX) AB	B	72/29.2
Q25	1590000720	S.TR DTA144EUA T106	B	68.8/31.6
Q26	1590003320	S.FET TPC6103 (TE85L)	T	73.7/25.1
Q27	1590000720	S.TR DTA144EUA T106	B	19.5/34.5
Q29	1590000430	S.TR DTC144EUA T106	B	54.7/39.7
Q34	1530002850	S.TR 2SC4116-BL (TE85R)	B	25.6/17.8
D1	1790001670	S.DIO RB706F-40T106	T	57.3/10.4
D2	1750000580	S.DIO 1SV307 (TPH3)	B	59.9/9.1
D3	1750000710	S.VCP HVC350BTRF	T	60.2/3.6
D4	1750000710	S.VCP HVC350BTRF	T	60.2/4.9
D5	1790001260	S.DIO MA2S077-(TX)	B	57.1/4.8
D6	1790001240	S.DIO MA2S728-(TX)	T	60.7/7.2
D7	1750000710	S.VCP HVC350BTRF	T	50/3.6
D8	1750000710	S.VCP HVC350BTRF	T	50/4.9
D9	1750000710	S.VCP HVC350BTRF	T	44.4/4.6
D10	1750000710	S.VCP HVC350BTRF	T	41.2/4.6
D12	1790001250	S.DIO MA2S111-(TX)	B	45.9/40
D14	1790001260	S.DIO MA2S077-(TX)	B	52.5/22
D15	1790001260	S.DIO MA2S077-(TX)	B	51.4/19.8
D16	1750000710	S.VCP HVC350BTRF	B	37.1/32.8
D17	1750000710	S.VCP HVC350BTRF	B	37.1/20.6
D18	1720000570	S.VCP MA368 (TX)	B	36.6/25
D21	1750000710	S.VCP HVC350BTRF	B	39.4/25.6
D22	1750000710	S.VCP HVC350BTRF	B	38.9/28.9
D25	1790001250	S.DIO MA2S111-(TX)	T	42.8/9
D37	1790001250	S.DIO MA2S111-(TX)	B	31.5/30.1
D38	1790001250	S.DIO MA2S111-(TX)	T	52.5/14.8
D39	1790001670	S.DIO RB706F-40T106	T	63.9/10.4
FI1	2030000150	S.MLH FL-335 (46.350 MHz)	B	31.7/5.8
FI2	2020001840	CER ALFYM450F=K		
FI3	2040001440	S.LC NFE31PT152Z1E9L	B	71.8/21.2
X1	6070000190	S.DCR CDBCB450KCAY24-R0	T	11.5/9.1
X2	6050011940	S.XTL CR-783 (15.3 MHz)	B	27.8/33.6
X3	6050011560	S.XTL CR-746 (4.000 MHz)	B	22.8/39.7
X4	6050011730	S.XTL CR-765 (3.6864 MHz)	B	15.3/21.4
L1	6200008700	S.COL 0.30-0.9-6TR 17.5N	B	65.6/6.1
L2	6200008240	S.COL 0.30-0.9-5TL 14N	B	61.9/5.5
L3	6200009470	S.COL 0.40-0.9-2TL	B	62.2/11.2
L4	6200009470	S.COL 0.40-0.9-2TL	B	67.4/16.2
L5	6200010850	S.COL LQW18AN22NG00D	B	58/6.8
L7	6200007690	S.COL LQW2BHN18NJ01L Except [USA-89]	T	57/6.6
L8	6200007690	S.COL LQW2BHN18NJ01L Except [USA-89]	T	53.4/6.6

[MAIN UNIT]

REF NO.	ORDER NO.	DESCRIPTION	M.	H/V LOCATION
L9	6200007680	S.COL LQW2BHN12NJ01L	B	46.9/7.2
L11	6200007680	S.COL LQW2BHN12NJ01L Except [USA-89]	B	41.4/5.3
L12	6200005720	S.COL ELJRE 33NG-F	B	44/10.8
L13	6200003350	S.COL ELJNC R27K-F	B	38.8/11.5
L15	6200002850	S.COL NL 252018T-R82J	B	56.9/9.8
L17	6200008240	S.COL 0.30-0.9-5TL 14N	B	68.2/21.4
L19	6200005650	S.COL ELJRE 8N2Z-F Except [USA-89]	B	52.1/33.3
L20	6200005680	S.COL ELJRE 15NG-F Except [USA-89]	B	53.1/27.4
L21	6200005720	S.COL ELJRE 33NG-F	B	46.2/21.3
L22	6200005700	S.COL ELJRE 22NG-F	B	46.9/28.5
L23	6200002790	S.COL ELJFC R82M-F	T	43.6/23.3
L25	6200008510	S.COL 0.30-0.9-4TR 10.5N	B	37.8/31.1
L26	6200008490	S.COL 0.30-0.9-3TR 7.5N	B	37.8/22.3
L27	6200004950	S.COL NL 252018T-1R8J	T	37.5/31.1
L28	6200002940	S.COL ELJFC 1R2K-F	T	38.3/22.6
L29	6200004660	S.COL MLF1608A 1R8K-T	T	27.6/30
L30	6200007720	S.COL LQW2BHN33NJ01L	T	62.4/7
L32	6200005690	S.COL ELJRE 18NG-F	T	39/34.1
L33	6200004480	S.COL MLF1608D R82K-T	B	25.8/15.7
L35	6200003540	S.COL MLF1608D R22K-T	B	27.5/18
L38	6200005710	S.COL ELJRE 27NG-F	B	47.4/12
L40	6200002850	S.COL NL 252018T-R82J	T	43.9/28.1
L41	6200005720	S.COL ELJRE 33NG-F	B	46.1/32
L42	6200004950	S.COL NL 252018T-1R8J	T	40/30.3
L43	6200002940	S.COL ELJFC 1R2K-F	T	39.3/26.1
L44	6200009110	S.COL 0.30-0.9-2TR 4.1N	B	64.3/12.3
L45	6200008700	S.COL 0.30-0.9-6TR 17.5N	B	68.3/8.1
R1	7030003490	S.RES ERJ3GEYJ 272 V (2.7 kΩ)	B	59.7/11.4
R2	7030005120	S.RES ERJ2GEJ 102 X (1 kΩ)	T	59.1/10
R3	7030004970	S.RES ERJ2GEJ 470 X (47 Ω)	T	52/19.8
R4	7030005050	S.RES ERJ2GEJ 103 X (10 kΩ)	T	55.5/10
R5	7030005050	S.RES ERJ2GEJ 103 X (10 kΩ)	T	54.5/14.8
R6	7030005090	S.RES ERJ2GEJ 104 X (100 kΩ)	T	47.8/16
R7	7030005310	S.RES ERJ2GEJ 124 X (120 kΩ)	T	49.1/16.5
R8	7030005170	S.RES ERJ2GEJ 474 X (470 kΩ)	T	54.5/16.6
R9	7030008280	S.RES ERJ2GEJ 271 X (270 Ω)	T	53.6/19.8
R10	7030005120	S.RES ERJ2GEJ 102 X (1 kΩ)	T	54.1/21.7
R11	7030005090	S.RES ERJ2GEJ 104 X (100 kΩ)	T	57.1/3.5
R12	7030005530	S.RES ERJ2GEJ 100 X (10 Ω)	T	48.3/10.3
R13	7030005090	S.RES ERJ2GEJ 104 X (100 kΩ)	T	53.3/3.5
R14	7030005050	S.RES ERJ2GEJ 103 X (10 kΩ)	T	54.7/4
R15	7030005240	S.RES ERJ2GEJ 473 X (47 kΩ)	T	48.3/5.9
R16	7030004980	S.RES ERJ2GEJ 101 X (100 Ω)	T	46.9/4.4
R17	7030004970	S.RES ERJ2GEJ 470 X (47 Ω)	B	48.4/7.2
R18	7030005050	S.RES ERJ2GEJ 103 X (10 kΩ)	T	50.1/8.5
R19	7030005080	S.RES ERJ2GEJ 823 X (82 kΩ)	T	49.1/7.7
R20	7030005240	S.RES ERJ2GEJ 102 X (1 kΩ) [USA-89] only	B	45.4/7.2
R21	7030005110	S.RES ERJ2GEJ 224 X (220 kΩ)	T	43.2/5.8
R22	7030005050	S.RES ERJ2GEJ 103 X (10 kΩ)	T	38.7/5.3
R23	7030005110	S.RES ERJ2GEJ 224 X (220 kΩ)	T	40/5.8
R25	7030005040	S.RES ERJ2GEJ 472 X (4.7 kΩ)	B	43.9/7.2
R29	7030007270	S.RES ERJ2GEJ 151 X (150 Ω)	B	41.5/13.1
R30	7030005120	S.RES ERJ2GEJ 102 X (1 kΩ)	B	39.5/8.7
R31	7030004980	S.RES ERJ2GEJ 101 X (100 Ω)	B	36.7/11.5
R32	7030004980	S.RES ERJ2GEJ 101 X (100 Ω)	B	37.7/7.7
R33	7030007270	S.RES ERJ2GEJ 151 X (150 Ω)	B	25.4/4.1
R34	7030005110	S.RES ERJ2GEJ 224 X (220 kΩ)	B	23.1/5.9
R35	7030004980	S.RES ERJ2GEJ 101 X (100 Ω)	B	22.3/7.9
R36	7030005030	S.RES ERJ2GEJ 152 X (1.5 kΩ)	T	13.5/13.6
R37	7030005000	S.RES ERJ2GEJ 471 X (470 Ω)	B	21.8/6.4
R38	7030005090	S.RES ERJ2GEJ 104 X (100 kΩ)	B	20.2/7.6
R39	7030004970	S.RES ERJ2GEJ 470 X (47 Ω)	B	7.7/6.8
R40	7030007270	S.RES ERJ2GEJ 151 X (150 Ω)	B	8.7/6.8
R43	7030004970	S.RES ERJ2GEJ 470 X (47 Ω)	B	17.4/11.1
R44	7030005090	S.RES ERJ2GEJ 104 X (100 kΩ)	B	11.6/11.4
R45	7030005070	S.RES ERJ2GEJ 683 X (68 kΩ)	B	14.4/13.2
R46	7030005000	S.RES ERJ2GEJ 471 X (470 Ω)	B	13.1/12.7
R50	7030004980	S.RES ERJ2GEJ 101 X (100 Ω)	B	49.6/14.3
R51	7030003670	S.RES ERJ3GEYJ 823 V (82 kΩ)	B	69.9/10.4
R52	7030004980	S.RES ERJ2GEJ 101 X (100 Ω)	B	54.2/9.4
R53	7030005530	S.RES ERJ2GEJ 100 X (10 Ω)	T	55.6/24.2
R54	7030005060	S.RES ERJ2GEJ 333 X (33 kΩ)	T	55.1/25.5
R55	7030005040	S.RES ERJ2GEJ 472 X (4.7 kΩ)	T	53.6/26
R57	7030008280	S.RES ERJ2GEJ 271 X (270 Ω) Except [USA-89]	T	55.8/30
R58	7030005060	S.RES ERJ2GEJ 333 X (33 kΩ)	T	53.1/31.4
R59	7030005040	S.RES ERJ2GEJ 472 X (4.7 kΩ)	T	52.3/26.5
R61	7030004970	S.RES ERJ2GEJ 470 X (47 Ω)	B	51.2/30.6
R62	7030008010	S.RES ERJ2GEJ 123 X (12 kΩ) [USA-89] only	B	54.8/32.6
R65	7030004980	S.RES ERJ2GEJ 101 X (100 Ω)	B	51.2/28.1
R66	7030007340	S.RES ERJ2GEJ 153 X (15 kΩ)	B	51.2/24.9
R67	7030004980	S.RES ERJ2GEJ 101 X (100 Ω)	B	53.7/22.3
R68	7030005050	S.RES ERJ2GEJ 103 X (10 kΩ)	B	53.7/20.5

M.=Mounted side (T: Mounted on the Top side, B: Mounted on the Bottom side)
S.=Surface mount

[MAIN UNIT]

REF NO.	ORDER NO.	DESCRIPTION	M.	H/V LOCATION
R69	7030005040	S.RES ERJ2GEJ 472 X (4.7 kΩ)	T	49.7/20.3
R70	7030005530	S.RES ERJ2GEJ 100 X (10 Ω)	B	45.9/24.5
R71	7030005240	S.RES ERJ2GEJ 473 X (47 kΩ)	B	45.9/23.5
R73	7030004980	S.RES ERJ2GEJ 101 X (100 Ω)	B	44.5/30
R74	7030005090	S.RES ERJ2GEJ 104 X (100 kΩ)	B	44.2/28.7
R75	7030005100	S.RES ERJ2GEJ 154 X (150 kΩ)	B	48.1/30
R76	7030004980	S.RES ERJ2GEJ 101 X (100 Ω)	B	44.9/31.3
R77	7030005050	S.RES ERJ2GEJ 103 X (10 kΩ)	T	48.1/32
R78	7030005010	S.RES ERJ2GEJ 681 X (680 Ω) Except [USA-89]	T	46.3/23.8
R79	7030006020	S.RES RR0510P-682-D (6.8 kΩ)	B	40.8/22.9
R80	7030005120	S.RES ERJ2GEJ 102 X (1 kΩ) Except [USA-89]	T	45.4/26.3
R81	7030009320	S.RES ERJ2GEJ 4R7 X (4.7 Ω)	B	43.4/21.9
R83	7030006020	S.RES RR0510P-682-D (6.8 kΩ)	B	40.6/30.5
R84	7030006020	S.RES RR0510P-682-D (6.8 kΩ)	B	42.2/32.3
R85	7030006020	S.RES RR0510P-682-D (6.8 kΩ)	B	42.4/21.1
R86	7030005530	S.RES ERJ2GEJ 100 X (10 Ω)	B	38/25.1
R87	7030005110	S.RES ERJ2GEJ 224 X (220 kΩ)	T	37/24.9
R89	7030005050	S.RES ERJ2GEJ 103 X (10 kΩ)	T	33.9/23.5
R90	7030005170	S.RES ERJ2GEJ 474 X (470 kΩ)	T	32.5/17.2
R92	7030005310	S.RES ERJ2GEJ 124 X (120 kΩ)	T	33/18.5
R93	7030005120	S.RES ERJ2GEJ 102 X (1 kΩ)	B	31/28.4
R94	7030005100	S.RES ERJ2GEJ 154 X (150 kΩ)	B	30.3/30.5
R95	7030005120	S.RES ERJ2GEJ 102 X (1 kΩ)	T	36/24.9
R96	7030009140	S.RES ERJ2GEJ 272 X (2.7 kΩ) Except [USA-89]	T	32.6/23.6
R97	7030005120	S.RES ERJ2GEJ 102 X (1 kΩ)	T	31.9/24.9
R98	7030007290	S.RES ERJ2GEJ 222 X (2.2 kΩ)	B	44.6/38.2
R100	7030005040	S.RES ERJ2GEJ 472 X (4.7 kΩ)	B	32.7/21.6
R101	7030005000	S.RES ERJ2GEJ 471 X (470 Ω)	T	32.1/22.3
R107	7030005090	S.RES ERJ2GEJ 104 X (100 kΩ)	T	26.7/15
R108	7030005050	S.RES ERJ2GEJ 103 X (10 kΩ)	B	26.7/30
R109	7030005580	S.RES ERJ2GEJ 560 X (56 Ω)	T	37.2/33.8
R111	7030005090	S.RES ERJ2GEJ 104 X (100 kΩ)	T	36.4/20.4
R112	7030010040	S.RES ERJ2GEJ JPW V		
R113	7030006610	S.RES ERJ2GEJ 394 X (390 kΩ)	T	39.3/28.2
R114	7030005100	S.RES ERJ2GEJ 154 X (150 kΩ)	B	38.2/26.9
R115	7030007570	S.RES ERJ2GEJ 122 X (1.2 kΩ)	B	27/19.8
R116	7030007060	S.RES ERJ2GEJ 684X (680 kΩ)	B	25.2/19.8
R117	7030005040	S.RES ERJ2GEJ 472 X (4.7 kΩ)	B	31.7/19.3
R118	7030005040	S.RES ERJ2GEJ 472 X (4.7 kΩ)	B	30.7/19.3
R119	7030005050	S.RES ERJ2GEJ 103 X (10 kΩ)	B	18.9/12.6
R120	7030005000	S.RES ERJ2GEJ 471 X (470 Ω)	T	24.7/13.6
R121	7030008010	S.RES ERJ2GEJ 123 X (12 kΩ)	T	25.8/17.5
R122	7030006610	S.RES ERJ2GEJ 394 X (390 kΩ)	T	25.3/18.8
R123	7030005080	S.RES ERJ2GEJ 823 X (82 kΩ)	T	13/16.7
R124	7030005060	S.RES ERJ2GEJ 333 X (33 kΩ)	T	13.5/15.4
R125	7030005240	S.RES ERJ2GEJ 473 X (47 kΩ)	T	16.1/14.8
R126	7030005160	S.RES ERJ2GEJ 105 X (1 MΩ)	T	14/18.5
R127	7030005060	S.RES ERJ2GEJ 333 X (33 kΩ)	T	20.8/24.8
R128	7030005060	S.RES ERJ2GEJ 333 X (33 kΩ)	T	21.8/24.8
R129	7030005840	S.RES RR0510R-473-D (47 kΩ)	B	22/13.9
R130	7030006000	S.RES RR0510P-222-D (2.2 kΩ)	B	22.2/19.2
R131	7030006000	S.RES RR0510P-222-D (2.2 kΩ)	B	22.9/21.5
R132	7030005840	S.RES RR0510R-473-D (47 kΩ)	B	23.4/22.8
R134	7030005060	S.RES ERJ2GEJ 333 X (33 kΩ)	T	25.6/20.6
R135	7030005160	S.RES ERJ2GEJ 105 X (1 MΩ)	T	14/21.8
R141	7030005060	S.RES ERJ2GEJ 333 X (33 kΩ)	T	26.5/32.2
R144	7030005160	S.RES ERJ2GEJ 105 X (1 MΩ)	B	22.5/36.5
R145	7030005530	S.RES ERJ2GEJ 100 X (10 Ω)	B	24.3/36.5
R147	7030005090	S.RES ERJ2GEJ 104 X (100 kΩ)	B	28/10
R148	7030005070	S.RES ERJ2GEJ 683 X (68 kΩ)	B	26.7/9.5
R151	7030005070	S.RES ERJ2GEJ 683 X (68 kΩ)	T	26.5/6.7
R152	7030008310	S.RES ERJ2GEJ 564 X (560 kΩ)	T	18/3.1
R153	7030005100	S.RES ERJ2GEJ 154 X (150 kΩ)	T	21.6/3.1
R155	7030005050	S.RES ERJ2GEJ 103 X (10 kΩ)	T	19.8/3.1
R157	7030005050	S.RES ERJ2GEJ 103 X (10 kΩ)	T	26.5/10.3
R161	7030005050	S.RES ERJ2GEJ 103 X (10 kΩ)	B	51.1/36.5
R162	7030005040	S.RES ERJ2GEJ 472 X (4.7 kΩ)	B	49.3/36
R163	7030005050	S.RES ERJ2GEJ 103 X (10 kΩ)	B	34.5/39.8
R164	7030005040	S.RES ERJ2GEJ 472 X (4.7 kΩ)	B	32.7/38.4
R165	7030005050	S.RES ERJ2GEJ 103 X (10 kΩ)	B	74.6/28.5
R166	7030007290	S.RES ERJ2GEJ 222 X (2.2 kΩ)	B	69.6/28.8
R167	7030005700	S.RES ERJ2GEJ 274 X (270 kΩ)	T	75.9/24.6
R168	7030005090	S.RES ERJ2GEJ 104 X (100 kΩ)	T	75.9/22.8
R169	7030005090	S.RES ERJ2GEJ 104 X (100 kΩ)	B	47.7/40.7
R170	7030005170	S.RES ERJ2GEJ 474 X (470 kΩ)	B	46.3/41.2
R173	7030008400	S.RES ERJ2GEJ 182 X (1.8 kΩ)	T	44.5/9.7
R180	7030005120	S.RES ERJ2GEJ 102 X (1 kΩ)	B	5.8/22.9
R190	7510001730	S.TMR ERTJOEP 473J	B	30.9/33.3
R191	7030010080	S.RES ERJ2RHD 104 X (100 kΩ)	B	32.7/33.3
R192	7030005090	S.RES ERJ2GEJ 104 X (100 kΩ)	T	13.6/32.5
R193	7030005090	S.RES ERJ2GEJ 104 X (100 kΩ)	T	13.6/30
R194	7030005050	S.RES ERJ2GEJ 103 X (10 kΩ)	T	22.6/37.5
R195	7030005050	S.RES ERJ2GEJ 103 X (10 kΩ)	T	17.7/37.4
R206	7030005170	S.RES ERJ2GEJ 474 X (470 kΩ)	T	43/10.2
R207	7030005110	S.RES ERJ2GEJ 224 X (220 kΩ)	T	44/11.2
R235	7030005050	S.RES ERJ2GEJ 103 X (10 kΩ)	B	49.6/12.5
R337	7030003490	S.RES ERJ3GEYJ 272 V (2.7 kΩ)	B	63.9/6.9
R338	7030005120	S.RES ERJ2GEJ 102 X (1 kΩ)	T	61.1/10.8
R339	7030003860	S.RES ERJ3GE JPW V	T	65.5/26.4
R344	7030000010	S.RES ERJ3GE JPW V	T	45.3/18.1

[MAIN UNIT]

REF NO.	ORDER NO.	DESCRIPTION	M.	H/V LOCATION
C1	4030006990	S.CER C1608 CH 1H 080D-T Except [USA-89]	B	67.3/10.4
C2	4030009560	S.CER C1608 CH 1H R75B-T Except [USA-89]	B	67.3/5.8
C3	4030006980	S.CER C1608 CH 1H 070D-T Except [USA-89]	B	63.9/4.3
C4	4030009550	S.CER C1608 CH 1H 2R5B-T	B	61.9/7.2
C5	4030009530	S.CER C1608 CH 1H 030B-T Except [USA-89]	B	59.8/4.3
C6	4030017460	S.CER ECJ0EB1E102K	B	59.8/6.5
C7	4030017460	S.CER ECJ0EB1E102K	B	61.7/9.7
C8	4030009910	S.CER C1608 CH 1H 040B-T Except [USA-89]	B	64.6/10.4
C9	4030009510	S.CER C1608 CH 1H 010B-T Except [USA-89]	B	61.1/12.8
C10	4030017460	S.CER ECJ0EB1E102K	B	66.3/13
C11	4030011770	S.CER C1608 CH 1H 060B-T Except [USA-89]	B	67/14.4
C13	4030007040	S.CER C1608 CH 1H 180J-T Except [USA-89]	B	67/18
C14	4030017360	S.CER ECJ0EC1H030B Except [USA-89]	B	55.8/6.8
C15	4030017460	S.CER ECJ0EB1E102K	T	60.6/9.5
C16	4030007050	S.CER C1608 CH 1H 220J-T Except [USA-89]	B	66.2/22.5
C17	4030017510	S.CER ECJ0EC1H680J	T	62.4/4.9
C18	4030006860	S.CER C1608 JB 1H 102K-T	T	55.3/20
C19	4030017460	S.CER ECJ0EB1E102K	B	57.5/8
C20	4030017590	S.CER ECJ0EC1H070C	T	59.5/7.5
C21	4030017390	S.CER ECJ0EC1H180J Except [USA-89]	T	57.1/4.5
C22	4030017610	S.CER ECJ0EC1H090C	T	58.5/6.5
C23	4030017350	S.CER ECJ0EC1H020B	T	55.2/7.6
C24	4030017390	S.CER ECJ0EC1H180J Except [USA-89]	T	53.3/4.5
C25	4030017610	S.CER ECJ0EC1H090C	T	51.9/6.7
C27	4030017460	S.CER ECJ0EB1E102K	T	55.7/4
C28	4030017460	S.CER ECJ0EB1E102K	B	54.7/4
C30	4030017590	S.CER ECJ0EC1H070C	T	50.6/7.2
C32	4030017460	S.CER ECJ0EB1E102K	T	46.9/6.4
C33	4030017460	S.CER ECJ0EB1E102K	T	49.3/10.3
C34	4030017420	S.CER ECJ0EC1H470J	T	50.3/10.3
C35	4030016930	S.CER ECJ0EB1A104K	T	51.1/8.5
C36	4030017460	S.CER ECJ0EB1E102K	B	50.1/11.2
C37	4030017460	S.CER ECJ0EB1E102K	B	45.4/5.4
C38	4030017460	S.CER ECJ0EB1E102K	B	49.4/7.2
C39	4030017620	S.CER ECJ0EC1H100C Except [USA-89]	T	44.4/6.8
C40	4030017520	S.CER ECJ0EC1H0R3B	T	43.1/7.3
C41	4030017380	S.CER ECJ0EC1H050B	B	42.9/7.2
C42	4030017460	S.CER ECJ0EB1E102K	T	39/4
C43	4030017460	S.CER ECJ0EB1E102K	T	43.2/4
C44	4030017550	S.CER ECJ0EC1H1R5B Except [USA-89]	B	42.9/5.4
C45	4030017620	S.CER ECJ0EC1H100C Except [USA-89]	T	41.2/6.8
C46	4030017460	S.CER ECJ0EB1E102K	T	40/4
C48	4030017400	S.CER ECJ0EC1H220J	B	41.5/11.1
C49	4030017380	S.CER ECJ0EC1H050B	B	45.5/9.9
C50	4030017460	S.CER ECJ0EB1E102K	B	41.5/12.1
C51	4030017460	S.CER ECJ0EB1E102K	B	39.5/7.7
C52	4030017420	S.CER ECJ0EC1H470J	B	39.5/9.7
C53	4030016790	S.CER ECJ0EB1C103K	B	37.7/8.7
C54	4030017460	S.CER ECJ0EB1E102K	B	37.7/9.7
C56	4030017400	S.CER ECJ0EC1H220J	B	33.3/9.1
C57	4030017460	S.CER ECJ0EB1E102K	B	35.3/11.5
C58	4030017460	S.CER ECJ0EB1E102K	B	23.6/4.1
C59	4030017460	S.CER ECJ0EB1E102K	B	23.6/8.4
C60	4030017460	S.CER ECJ0EB1E102K	B	23.6/7.4
C61	4030017430	S.CER ECJ0EC1H101J	B	19.2/5.4
C62	4030017680	S.CER ECJ0EC1H820J	B	17.9/9.7
C63	4030017420	S.CER ECJ0EC1H470J	B	18.9/7.1
C65	4030017460	S.CER ECJ0EB1E102K	B	18.4/8.4
C66	4030017460	S.CER ECJ0EB1E102K	B	18.9/10.2
C67	4030017460	S.CER ECJ0EB1E102K	B	6.4/7.3
C69	4030017730	S.CER ECJ0EB1E471K	B	12.1/12.7
C70	4030017730	S.CER ECJ0EB1E471K	B	11.1/12.7
C71	4030016930	S.CER ECJ0EB1A104K	B	9.8/11.6
C72	4030017420	S.CER ECJ0EC1H470J	B	51/16
C73	4030017460	S.CER ECJ0EB1E102K	T	54.1/22.7
C74	4030017460	S.CER ECJ0EB1E102K	T	60.1/10.8
C75	4550006050	S.TAN TEESVA 0J 106M8L	B	9.6/16
C76	4030016790	S.CER ECJ0EB1C103K	T	50.1/18.3
C77	4030017460	S.CER ECJ0EB1E102K	B	53.2/11.5
C78	4030017460	S.CER ECJ0EB1E102K	T	56.4/14.3
C79	4030011810	S.CER C1608 JB 1A 224K-T	T	55.7/16
C80	4030017780	S.CER ECJ0EB1E472K	T	50.1/16.5
C81	4030016790	S.CER ECJ0EB1C103K	T	67.4/21.8
C82	4030017460	S.CER ECJ0EB1E102K	B	69.2/23.2
C83	4030017390	S.CER ECJ0EC1H180J Except [USA-89]	T	56.1/25.5
C84	4030017460	S.CER ECJ0EB1E102K	T	54.1/24.7
C86	4030017400	S.CER ECJ0EC1H220J Except [USA-89]	T	57.1/25.5
C88	4030017460	S.CER ECJ0EB1E102K	T	52.3/28.8
C91	4030017730	S.CER ECJ0EB1E471K	T	52.8/24.2
C92	4030017630	S.CER ECJ0EC1H120J	T	55.8/31
C93	4030017600	S.CER ECJ0EC1H080C Except [USA-89]	B	54.8/27.1
C97	4030017460	S.CER ECJ0EB1E102K	B	51.7/32.1
C98	4030017380	S.CER ECJ0EC1H050C Except [EUR-88]	B	51.2/23.1
C99	4030017460	S.CER ECJ0EB1E102K	B	54.7/22.3
C100	4030017620	S.CER ECJ0EC1H100C	T	49.7/21.3

M.=Mounted side (T: Mounted on the Top side, B: Mounted on the Bottom side)

S.=Surface mount

[MAIN UNIT]

REF NO.	ORDER NO.	DESCRIPTION	M.	H/V LOCATION
C102	4030017380	S.CER ECJ0EC1H050B	B	48/26.4
C103	4030017350	S.CER ECJ0EC1H020B	B	48.6/28.2
C104	4030017460	S.CER ECJ0EB1E102K	B	45.2/28.7
C105	4030017460	S.CER ECJ0EB1E102K	B	46.3/30
C106	4030017420	S.CER ECJ0EC1H470J	T	50.8/30.1
C107	4030017460	S.CER ECJ0EB1E102K	T	52.4/35.2
C108	4030016790	S.CER ECJ0EB1C103K	B	54.2/19.2
C109	4030017460	S.CER ECJ0EB1E102K	T	43.4/26.3
C110	4030017730	S.CER ECJ0EB1E471K	T	43.1/30.7
C111	4030017420	S.CER ECJ0EC1H470J	T	45.3/30.2
C112	4030017460	S.CER ECJ0EB1E102K	B	45.9/22.5
C113	4030017520	S.CER ECJ0EC1H0R3B	B	43.7/26.2
C114	4030017380	S.CER ECJ0EC1H050B Except [USA-89]	B	42.1/22.4
C115	4030017570	S.CER ECJ0EC1H040B Except [USA-89]	B	40.9/24.2
C116	4030017460	S.CER ECJ0EB1E102K	B	40.9/25.2
C117	4030017730	S.CER ECJ0EB1E471K	B	41.6/26.2
C118	4030017530	S.CER ECJ0EC1H0R5B	B	43.7/27.2
C119	4030016790	S.CER ECJ0EB1C103K	B	41.6/27.2
C120	4030017730	S.CER ECJ0EB1E471K	B	40.6/28.6
C121	4030017380	S.CER ECJ0EC1H050B Except [USA-89]	B	42.1/31
C120	4030017570	S.CER ECJ0EC1H040B Except [USA-89]	B	43.2/32.3
C123	4030017640	S.CER ECJ0EC1H150J Except [USA-89]	B	40.9/32
C124	4030017380	S.CER ECJ0EC1H050B Except [USA-89]	B	39.6/32.3
C126	4030017640	S.CER ECJ0EC1H150J Except [USA-89]	B	40.9/21.4
C127	4030017580	S.CER ECJ0EC1H060C Except [USA-89]	B	39.6/21.1
C129	4030017530	S.CER ECJ0EC1H0R5B	B	38.3/23.8
C130	4030016950	S.CER ECJ0EB1A473K	T	31.6/23.6
C132	4030017460	S.CER ECJ0EB1E102K	T	31.4/19.3
C133	4030017630	S.CER ECJ0EC1H120J Except [USA-89]	B	39.6/30.5
C134	4030017630	S.CER ECJ0EC1H120J Except [USA-89]	B	39.6/22.9
C135	4030017460	S.CER ECJ0EB1E102K	B	36.7/28.6
C136	4030016930	S.CER ECJ0EB1A104K	B	36.7/29.6
C137	4030016790	S.CER ECJ0EB1C103K	B	44.1/36.9
C138	4030017460	S.CER ECJ0EB1E102K	T	37.1/29
C139	4030016930	S.CER ECJ0EB1A104K	T	46.3/34.2
C140	4030016930	S.CER ECJ0EB1A104K	B	28.5/28.4
C141	4030017460	S.CER ECJ0EB1E102K	B	32.7/20.6
C143	4030017460	S.CER ECJ0EB1E102K	T	32.1/21.3
C144	4030017420	S.CER ECJ0EC1H470J	T	36.8/27.3
C145	4030017420	S.CER ECJ0EC1H470J	T	36.2/22.9
C146	4550000550	S.TAN TEESVA 1E 224M8L	T	35.2/30.3
C147	4550000460	S.TAN TEESVA 1C 105M8L	T	30/25.9
C148	4550006250	S.TAN TEESVA 1A 106M8L	B	43/40.3
C149	4030017460	S.CER ECJ0EB1E102K	T	28.4/28.5
C150	4030017490	S.CER C1608 JB 1A 105K-T	T	30.2/16.8
C151	4030016930	S.CER ECJ0EB1A104K	B	28.9/30
C152	4030017420	S.CER ECJ0EC1H470J	B	31.7/16.9
C153	4030017420	S.CER ECJ0EC1H470J	B	30.7/16.9
C154	4030017420	S.CER ECJ0EC1H470J	B	29.7/18.5
C155	4030017420	S.CER ECJ0EC1H470J	T	28.4/31.5
C156	4030017460	S.CER ECJ0EB1E102K	B	25.3/27.5
C157	4030017620	S.CER ECJ0EC1H100C	B	25.7/29
C158	4030016930	S.CER ECJ0EB1A104K	B	24.8/35.2
C159	4030017460	S.CER ECJ0EB1E102K	B	24.8/31
C161	4030017620	S.CER ECJ0EC1H100C	B	25.3/23.8
C162	4030017500	S.CER ECJ0EC1H560J	B	29.2/17.2
C163	4030017570	S.CER ECJ0EC1H040B	B	27.5/15.8
C164	4030017590	S.CER ECJ0EC1H070C	B	26.2/14.5
C165	4030016790	S.CER ECJ0EB1C103K	B	28.7/18.5
C166	4030017360	S.CER ECJ0EC1H030B	B	27.5/14
C167	4030016930	S.CER ECJ0EB1A104K	B	6.4/6.3
C168	4030016930	S.CER ECJ0EB1A104K	B	8.8/5.5
C169	4030016930	S.CER ECJ0EB1A104K	B	8.8/8.1
C170	4030016930	S.CER ECJ0EB1A104K	T	25.7/4.9
C171	4030018560	S.CER C2012 JB 1A 475K-T	T	24.4/3.2
C172	4030017460	S.CER ECJ0EB1E102K	T	26.5/3.1
C173	4030017460	S.CER ECJ0EB1E102K	T	28.2/18.3
C180	4030016930	S.CER ECJ0EB1A104K	B	26.7/10.5
C188	4030017460	S.CER ECJ0EB1E102K	B	17.9/6.6
C201	4030017490	S.CER ECJ0EB1A105K	B	36.9/27.6
C202	4030016930	S.CER ECJ0EB1A104K	B	36.9/27.6
C203	4030017460	S.CER ECJ0EB1E102K	B	39.8/27.3
C205	4030017380	S.CER ECJ0EC1H050B	T	44.1/32.8
C206	4030017590	S.CER ECJ0EC1H070C	T	40.8/33.3
C208	4030017590	S.CER ECJ0EC1H070C	T	36.2/33.8
C209	4030017460	S.CER ECJ0EB1E102K	T	35.2/33.8
C211	4030018560	S.CER C2012 JB 1A 475K-T	B	16.5/4
C220	4030016970	S.CER ECJ0EB1C223K	B	5.3/24.2
C224	4550000460	S.TAN TEESVA 1C 105M8L	B	30.6/14.6
C227	4030016790	S.CER ECJ0EB1C103K	B	23.3/12.9
C228	4030017460	S.CER ECJ0EB1E102K	B	18.4/13.9
C229	4030016930	S.CER ECJ0EB1A104K	T	24.7/10.3
C230	4030017460	S.CER ECJ0EB1E102K	T	67.4/28.3
C231	4030016790	S.CER ECJ0EB1C103K	B	52.4/34.7
C232	4030016790	S.CER ECJ0EB1C103K	B	32.7/40.2
C233	4550006350	S.TAN TEESVB2 1A 226M8L	B	67.1/27.2
C234	4030017730	S.CER ECJ0EF1C471Z	B	69.6/29.8
C235	4030016790	S.CER ECJ0EB1C103K	B	66.9/31
C236	4510004630	S.ELE ECEV1CA100SR	T	72.5/20.4
C237	4030016790	S.CER ECJ0EB1C103K	T	75.9/29.1
C238	4550006480	S.TAN TEESVA 1C 475M8L	B	66.5/35.1
C239	4030017330	S.CER ECJ0EF1C104Z	T	71.5/29
C240	4030017460	S.CER ECJ0EB1E102K	B	29.6/11
C241	4030017460	S.CER ECJ0EB1E102K	T	51.6/37.6

[MAIN UNIT]

REF NO.	ORDER NO.	DESCRIPTION	M.	H/V LOCATION
C242	4030017460	S.CER ECJ0EB1E102K	B	34.6/36
C243	4030017420	S.CER ECJ0EC1H470J	B	53.5/41.5
C244	4030017420	S.CER ECJ0EC1H470J	B	22.2/20.2
C251	4030017420	S.CER ECJ0EC1H470J	T	24.8/17.5
C252	4030017910	S.CER ECJ0EB1H152K	T	26.5/31.2
C253	4030017710	S.CER ECJ0EC1H181J	T	14/16.7
C254	4030017750	S.CER ECJ0EB1E122K	T	14.8/14.6
C255	4030016930	S.CER ECJ0EB1A104K	B	17.4/12.1
C256	4030017760	S.CER ECJ0EB1H222K	T	13/18.5
C257	4030016930	S.CER ECJ0EB1A104K	T	20.8/26.6
C258	4030016930	S.CER ECJ0EB1A104K	T	21.8/26.6
C259	4030017400	S.CER ECJ0EC1H220J	B	9/23.1
C260	4030017400	S.CER ECJ0EC1H220J	B	22.1/23.1
C261	4550000460	S.TAN TEESVA 1C 105M8L	B	20.8/17.6
C262	4550000460	S.TAN TEESVA 1C 105M8L	B	20.8/15.5
C263	4030017460	S.CER ECJ0EB1E102K	T	13/21.1
C264	4550006350	S.TAN TEESVB2 1A 226M8L	B	14.2/17.1
C265	4030017460	S.CER ECJ0EB1E102K	T	26.1/21.9
C266	4030017720	S.CER ECJ0EB1H331K	T	24.6/20.6
C267	4030017460	S.CER ECJ0EB1E102K	B	22/12.9
C271	4030016930	S.CER ECJ0EB1A104K	T	26/33.5
C273	4030016930	S.CER ECJ0EB1A104K	B	16.5/37.2
C274	4030016930	S.CER ECJ0EB1A104K	B	17.1/26.7
C275	4030017490	S.CER C1608 JB 1A 105K-T	B	6.9/41.6
C276	4030017490	S.CER C1608 JB 1A 105K-T]	B	11.1/41.6
C277	4030017490	S.CER C1608 JB 1A 105K-T	B	14.2/39.9
C279	4030017650	S.CER ECJ0EC1H270J]	B	29.1/41.4
C280	4030017650	S.CER ECJ0EC1H270J	B	16.5/41.4
C281	4030016930	S.CER ECJ0EB1A104K	T	13.6/34.3
C287	4030016930	S.CER ECJ0EB1A104K	B	32.7/31.8
C288	4030016930	S.CER ECJ0EB1A104K]	B	20.3/31.3
C289	4030016930	S.CER ECJ0EB1A104K]	B	19.3/32.6
C290	4030016930	S.CER ECJ0EB1A104K	T	25.4/28.7
C291	4030017420	S.CER ECJ0EC1H470J	B	56.1/11.9
C292	4030017460	S.CER ECJ0EB1E102K	B	54.7/8.1
C293	4030017460	S.CER ECJ0EB1E102K	T	77.4/24.4
C294	4030017460	S.CER ECJ0EB1E102K	B	4.7/26.2
C295	4030017460	S.CER ECJ0EB1E102K	T	71.5/24.7
C296	4030017460	S.CER ECJ0EB1E102K	T	77.4/23.4
C297	4030017460	S.CER ECJ0EB1E102K	T	75.9/21
C298	4030017460	S.CER ECJ0EB1E102K	T	2.8/31.8
C299	4030017460	S.CER ECJ0EB1E102K	T	2.8/32.8
C300	4030017460	S.CER ECJ0EB1E102K	T	2.8/33.8
C301	4030017460	S.CER ECJ0EB1E102K	T	2.8/30.5
C302	4030017620	S.CER ECJ0EC1H100C	B	48.6/14.3
C303	4030017460	S.CER ECJ0EB1E102K	B	50.9/13
C304	4030016930	S.CER ECJ0EB1A104K	T	18.7/37.4
C305	4030016930	S.CER ECJ0EB1A104K	T	24.4/37.5
C333	4030017420	S.CER ECJ0EC1H470J	T	46.9/5.4
C339	4030017520	S.CER ECJ0EC1H0R3B Except [USA-89]	T	45.4/6.8
C363	4030017580	S.CER ECJ0EC1H060C	B	47.3/13.8
C364	4030017580	S.CER ECJ0EC1H060C	B	46/11.2
C365	4030009520	S.CER C1608 CH 1H 020B-T Except [USA-89]	B	69.3/5.8
C366	4030017460	S.CER ECJ0EB1E102K	T	65.8/27.6
C367	4030009910	S.CER C1608 CH 1H 040B-T Except [USA-89]	B	58.5/4.8
C368	4030017420	S.CER ECJ0EC1H470J	T	66.3/28.9
C369	4030006860	S.CER C1608 JB 1H 102K-T	T	55.3/18.7
C370	4030017460	S.CER ECJ0EB1E102K	B	51.7/26.2
C371	4030017460	S.CER ECJ0EB1E102K	T	62.1/10.8
C372	4030017590	S.CER ECJ0EC1H070C Except [USA-89]	B	53.5/26.2
C373	4030017460	S.CER ECJ0EB1E102K	T	52.6/30.1
C374	4550006650	S.TAN ECST1CY685R	B	52.6/15.7
C375	4550006250	S.TAN TEESVA 1A 106M8L	T	49.7/33.5
J1	6510023520	S.CNR 54104-3692	T	7.4/25.2
F1	5210000900	S.FUS 0434003.NRP	T	86.1/36.8
S1	2260002750	S.SW EVQP7M01K	T	91.2/34
EP1	6910015370	S.BEA ACZ1005Y-102-T	T	53.4/35.2
EP3	6910015370	S.BEA ACZ1005Y-102-T	B	34.8/43.4
EP4	6910015600	S.BEA ACZ1005Y-241	T	34.3/26.1
EP5	6910015600	S.BEA ACZ1005Y-241	T	23.5/29.8

M.=Mounted side (T: Mounted on the Top side, B: Mounted on the Bottom side)
S.=Surface mount

[FRON UNIT]

REF NO.	ORDER NO.	DESCRIPTION	M.	H/V LOCATION
IC401	1140011780	S.IC HD6432264F01TF	T	22.9/28
IC403	1110005340	S.IC NJM12902V-TE1	T	19.2/43.2
IC405	1110001810	S.IC TA7368F (ER)	T	25.9/53.3
IC406	1130011740	S.IC TC7W66FK (TE85L)	T	7.2/42.3
IC407	1110005330	S.IC NJM12904V-TE1	T	7.1/31.3
IC408	1110006260	S.IC BD5242G-TR	T	30.4/18.5
IC409	1130011580	S.IC 24LC64T-I/SN	T	8.8/17.8
IC410	1130007570	S.IC BU4094BCFV-E2	T	40.6/37.3
Q401	1520000450	S.TR 2SB1132 T100 Q	T	35.1/44.8
Q402	1590001190	S.TR XP6501-(TX) .AB	T	34.2/40.7
Q403	1530002840	S.TR 2SC4116-Y (TE85R)	B	10.8/57
Q404	1560001330	S.FET RSR025N03	B	11.6/59.9
Q405	1560001330	S.FET RSR025N03	B	15.1/59.9
Q406	1590000430	S.TR DTC144EUA T106	B	15.6/57
Q407	1590000720	S.TR DTA144EUA T106	T	42.6/30.6
Q408	1590000430	S.TR DTC144EUA T106	T	26.5/39.1
Q409	1590002370	S.TR XP4111 (TX)	T	39.8/30.8
Q411	1590001660	S.TR XP4312 (TX)	T	27.4/18.6
Q412	1590000720	S.TR DTA144EUA T106	T	13/17.6
Q413	1560001330	S.FET RSR025N03	B	32.3/53
D401	1790001250	S.DIO MA2S111-(TX)	T	15.9/17.2
D402	1790001250	S.DIO MA2S111-(TX)	T	17.8/17.4
D403	1790001250	S.DIO MA2S111-(TX)	T	13.1/15.7
D404	1790001260	S.DIO MA2S077-(TX)	T	34.7/18.6
D406	1790001250	S.DIO MA2S111-(TX)	T	36.5/36.9
X401	6050011720	S.XTL CR-764 (19.6608 MHz)	T	42.1/18.8
R402	7030005060	S.RES ERJ2GEJ 333 X (33 kΩ)	T	11.6/51.8
R403	7030005120	S.RES ERJ2GEJ 102 X (1 kΩ)	T	16/18.4
R404	7030005120	S.RES ERJ2GEJ 102 X (1 kΩ)	T	19/19.6
R405	7030007340	S.RES ERJ2GEJ 153 X (15 kΩ)	T	6/36.6
R406	7030005210	S.RES ERJ2GEJ 822 X (8.2 kΩ)	T	6/37.6
R407	7030005230	S.RES ERJ2GEJ 334 X (330 kΩ)	T	6.5/26.3
R408	7030005090	S.RES ERJ2GEJ 104 X (100 kΩ)	T	6/35.6
R409	7030005090	S.RES ERJ2GEJ 104 X (100 kΩ)	T	16/19.4
R410	7030005090	S.RES ERJ2GEJ 104 X (100 kΩ)	T	9.4/38.8
R411	7030005090	S.RES ERJ2GEJ 104 X (100 kΩ)	T	11.3/24.3
R412	7030005090	S.RES ERJ2GEJ 104 X (100 kΩ)	T	28/14.2
R413	7030005600	S.RES ERJ2GEJ 273 X (27 kΩ)	T	26/14.2
R414	7030005600	S.RES ERJ2GEJ 273 X (27 kΩ)	T	33.9/14.3
R415	7030005100	S.RES ERJ2GEJ 154 X (150 kΩ)	T	37.9/23
R416	7030005100	S.RES ERJ2GEJ 154 X (150 kΩ)	T	31.2/21
R417	7030005170	S.RES ERJ2GEJ 474 X (470 kΩ)	T	16/14.9
R418	7030005170	S.RES ERJ2GEJ 474 X (470 kΩ)	T	5/15
R420	7030005600	S.RES ERJ2GEJ 273 X (27 kΩ)	T	28.8/37.7
R421	7030005090	S.RES ERJ2GEJ 104 X (100 kΩ)	T	30.1/38
R422	7030005090	S.RES ERJ2GEJ 104 X (100 kΩ)	T	30/37
R423	7030005090	S.RES ERJ2GEJ 104 X (100 kΩ)	T	31.7/37
R426	7030005230	S.RES ERJ2GEJ 334 X (330 kΩ)	T	14.7/37.7
R427	7030005240	S.RES ERJ2GEJ 473 X (47 kΩ)	T	16/39.9
R428	7030005240	S.RES ERJ2GEJ 473 X (47 kΩ)	T	16/38.9
R429	7030005040	S.RES ERJ2GEJ 472 X (4.7 kΩ)	T	13.7/38.1
R430	7030007350	S.RES ERJ2GEJ 393 X (39 kΩ)	T	12.7/40.6
R432	7030005720	S.RES ERJ2GEJ 563 X (56 kΩ)	T	13.7/40.6
R433	7030005090	S.RES ERJ2GEJ 104 X (100 kΩ)	T	11.7/40.6
R434	7030005000	S.RES ERJ2GEJ 471 X (470 Ω)	B	35/56.5
R435	7030007260	S.RES ERJ2GEJ 330 X (33 Ω)	T	22.6/56.2
R436	7030005530	S.RES ERJ2GEJ 100 X (10 Ω)	T	24.4/49.8
R437	7030005120	S.RES ERJ2GEJ 102 X (1 kΩ)	T	31.7/41.4
R438	7030007300	S.RES ERJ2GEJ 332 X (3.3 kΩ)	T	31.7/39.4
R439	7030009140	S.RES ERJ2GEJ 272 X (2.7 kΩ)	T	34.6/38.9
R440	7030005090	S.RES ERJ2GEJ 104 X (100 kΩ)	T	42.8/32.7
R441	7030005070	S.RES ERJ2GEJ 683 X (68 kΩ)	T	37.3/35.5
R442	7030005170	S.RES ERJ2GEJ 474 X (470 kΩ)	B	12.7/57.3
R443	7030005170	S.RES ERJ2GEJ 474 X (470 kΩ)	B	11.4/55.2
R444	7030005090	S.RES ERJ2GEJ 104 X (100 kΩ)	B	13.7/57.3
R445	7030004980	S.RES ERJ2GEJ 101 X (100 Ω)	B	32.3/55.2
R446	7030005090	S.RES ERJ2GEJ 104 X (100 kΩ)	B	30.1/52.1
R455	7030005000	S.RES ERJ2GEJ 471 X (470 Ω)	T	43.2/27.8
R456	7030004980	S.RES ERJ2GEJ 101 X (100 Ω)	T	43.2/28.8
R457	7030005000	S.RES ERJ2GEJ 471 X (470 Ω)	B	45.2/48.4
R458	7030005120	S.RES ERJ2GEJ 102 X (1 kΩ)	B	43.9/49.9
R461	7030005110	S.RES ERJ2GEJ 224 X (220 kΩ)	T	33.1/33.6
R462	7030005720	S.RES ERJ2GEJ 563 X (56 kΩ)	T	32.1/33.6
R463	7030005220	S.RES ERJ2GEJ 223 X (22 kΩ)	T	31.1/33.6
R464	7030005220	S.RES ERJ2GEJ 223 X (22 kΩ)	T	32.1/35.2
R465	7030005050	S.RES ERJ2GEJ 103 X (10 kΩ)	T	31.1/35.2
R466	7030005240	S.RES ERJ2GEJ 473 X (47 kΩ)	T	26.6/41.4
R467	7030005240	S.RES ERJ2GEJ 473 X (47 kΩ)	T	25.6/41.4
R468	7030005240	S.RES ERJ2GEJ 473 X (47 kΩ)	T	23.6/41.4
R469	7030005040	S.RES ERJ2GEJ 472 X (4.7 kΩ)	T	18.9/39
R470	7030005240	S.RES ERJ2GEJ 473 X (47 kΩ)	T	20.1/38.7
R471	7030005110	S.RES ERJ2GEJ 224 X (220 kΩ)	T	34.6/24.3
R472	7030005090	S.RES ERJ2GEJ 104 X (100 kΩ)	T	33.6/24.3
R473	7030005240	S.RES ERJ2GEJ 473 X (47 kΩ)	T	32.6/24.3
R474	7030005220	S.RES ERJ2GEJ 223 X (22 kΩ)	T	31.6/24.3
R475	7030005050	S.RES ERJ2GEJ 103 X (10 kΩ)	T	35.6/24.3

[FRON UNIT]

REF NO.	ORDER NO.	DESCRIPTION	M.	H/V LOCATION
R476	7030005070	S.RES ERJ2GEJ 683 X (68 kΩ)	T	27.2/45.2
R477	7030005070	S.RES ERJ2GEJ 683 X (68 kΩ)	T	25.2/45.2
R478	7030005070	S.RES ERJ2GEJ 683 X (68 kΩ)	T	23.9/44.8
R479	7030005070	S.RES ERJ2GEJ 683 X (68 kΩ)	T	18.6/47.9
R480	7030005070	S.RES ERJ2GEJ 683 X (68 kΩ)	T	17/46.9
R482	7030005090	S.RES ERJ2GEJ 104 X (100 kΩ)	T	37.2/34.1
R483	7030005090	S.RES ERJ2GEJ 104 X (100 kΩ)	T	16/21.4
R484	7030005090	S.RES ERJ2GEJ 104 X (100 kΩ)	T	16/20.4
R485	7030005090	S.RES ERJ2GEJ 104 X (100 kΩ)	T	11.1/22.7
R486	7410001130	S.ARY EXB28V102JX (1 kΩ)	T	13.6/24.7
R487	7030005090	S.RES ERJ2GEJ 104 X (100 kΩ)	T	33.5/23
R488	7030005090	S.RES ERJ2GEJ 104 X (100 kΩ)	T	31.9/31.3
R489	7030005090	S.RES ERJ2GEJ 104 X (100 kΩ)	T	32.9/31.3
R490	7030005090	S.RES ERJ2GEJ 104 X (100 kΩ)	T	33.9/31.3
R491	7030005530	S.RES ERJ2GEJ 100 X (10 Ω)	T	37.3/17.5
R492	7030005160	S.RES ERJ2GEJ 105 X (1 MΩ)	T	37.3/18.5
R493	7030008010	S.RES ERJ2GEJ 123 X (12 kΩ)	T	35.9/18.8
R494	7030008010	S.RES ERJ2GEJ 123 X (12 kΩ)	T	33.6/18.3
R495	7030008010	S.RES ERJ2GEJ 123 X (12 kΩ)	T	36.9/20.8
R496	7030005050	S.RES ERJ2GEJ 103 X (10 kΩ)	T	8/23
R497	7030005050	S.RES ERJ2GEJ 103 X (10 kΩ)	T	11.3/25.3
R500	7030005090	S.RES ERJ2GEJ 104 X (100 kΩ)	T	28.7/20.6
R501	7030005090	S.RES ERJ2GEJ 104 X (100 kΩ)	T	29.3/16
R502	7030010080	S.RES ERJ2RHD 104 X (100 kΩ)	T	36.9/14.3
R503	7030010080	S.RES ERJ2RHD 104 X (100 kΩ)	T	38.9/14.3
R506	7030007300	S.RES ERJ2GEJ 332 X (3.3 kΩ)	T	8.8/25.5
R507	7030005600	S.RES ERJ2GEJ 273 X (27 kΩ)	T	7.8/25.5
R508	7030007290	S.RES ERJ2GEJ 222 X (2.2 kΩ)	T	5.3/22
R509	7030005090	S.RES ERJ2GEJ 104 X (100 kΩ)	T	25.1/18
R511	7030005700	S.RES ERJ2GEJ 274 X (270 kΩ)	T	7.8/35.6
R512	7030005090	S.RES ERJ2GEJ 104 X (100 kΩ)	T	5.2/25.8
R513	7030009290	S.RES ERJ2GEJ 562 X (5.6 kΩ)	T	5.4/39.8
R514	7030010040	S.RES ERJ2GE-JPW	T	7.4/48.6
C401	4030017460	S.CER ECJ0EB1E102K	T	10.6/51.8
C402	4030017460	S.CER ECJ0EB1E102K	T	13.6/19.4
C403	4030017460	S.CER ECJ0EB1E102K	T	18/19.6
C404	4030017460	S.CER ECJ0EB1E102K	T	9.3/41.3
C405	4030017760	S.CER ECJ0EB1H222K	T	7.8/36.6
C406	4030018110	S.CER ECJ0EB1H272K	T	6/38.6
C407	4030017430	S.CER ECJ0EC1H101J	T	6.5/25.3
C408	4030016930	S.CER ECJ0EB1A104K	T	28.7/39.9
C409	4030016930	S.CER ECJ0EB1A104K	T	27.5/37.3
C410	4030016930	S.CER ECJ0EB1A104K	T	29.8/39.9
C411	4030016930	S.CER ECJ0EB1A104K	T	31.7/38
C412	4030016930	S.CER ECJ0EB1A104K	T	35.9/20.8
C413	4030016930	S.CER ECJ0EB1A104K	T	34.9/20.8
C414	4030017640	S.CER ECJ0EC1H150J	T	37.3/19.5
C415	4030016790	S.CER ECJ0EB1C103K	T	30.2/21
C416	4030017630	S.CER ECJ0EC1H120J	T	38.9/18.8
C417	4030017580	S.CER ECJ0EC1H060C	T	38.9/20.8
C418	4030016930	S.CER ECJ0EB1A104K	T	33/16
C419	4550006250	S.TAN TEESVA 1A 106M8L	T	23.7/16.4
C420	4030016930	S.CER ECJ0EB1A104K	T	23.4/18
C421	4030016930	S.CER ECJ0EB1A104K	T	16/37.9
C423	4030016930	S.CER ECJ0EB1A104K	T	12.7/39
C424	4030017460	S.CER ECJ0EB1E102K	T	30.3/54.8
C425	4030017730	S.CER ECJ0EB1E471K	T	14.7/40.6
C426	4030017460	S.CER ECJ0EB1E102K	B	35.5/55.2
C427	4550006080	S.TAN TEESVB2 1C 106M8L	T	40.4/45.9
C428	4030016930	S.CER ECJ0EB1A104K	T	36.9/47.5
C429	4030017460	S.CER ECJ0EB1E102K	T	33.7/48.3
C430	4030017460	S.CER ECJ0EB1E102K	T	31.7/40.4
C431	4030016930	S.CER ECJ0EB1A104K	T	34.3/37.9
C432	4030017460	S.CER ECJ0EB1E102K	T	39.1/43.2
C433	4030017420	S.CER ECJ0EC1H470J	B	25.2/53.3
C434	4550006250	S.TAN TEESVA 1A 106M8L	T	20.7/54.1
C435	4550007060	S.TAN ECSTIAX336R	T	17.8/54.8
C436	4030016950	S.CER ECJ0EB1A473K	T	26.2/49.8
C437	4030017490	S.CER C1608 JB 1A 105K-T	B	33.8/56
C441	4030016960	S.CER ECJ0EB1C183K	T	25.7/42.7
C442	4030016930	S.CER ECJ0EB1A104K	T	24.6/41.4
C443	4030017750	S.CER ECJ0EB1E122K	T	23.9/42.7
C444	4030016930	S.CER ECJ0EB1A104K	T	20.1/39.7
C445	4030017460	S.CER ECJ0EB1E102K	T	33.1/35.2
C446	4030017460	S.CER ECJ0EB1E102K	T	26.2/45.2
C447	4030017760	S.CER ECJ0EB1H222K	T	23.9/45.8
C448	4030017690	S.CER ECJ0EC1H121J	T	25.7/43.8
C449	4030017770	S.CER ECJ0EB1E332K	T	18.6/46.9
C450	4030017420	S.CER ECJ0EC1H470J	T	17/47.9
C461	4030017420	S.CER ECJ0EC1H470J	T	38.9/23
C462	4030017420	S.CER ECJ0EC1H470J	T	32.2/21
C463	4030017420	S.CER ECJ0EC1H470J	T	16/16
C464	4030017420	S.CER ECJ0EC1H470J	T	4/15
C465	4030017420	S.CER ECJ0EC1H470J	T	27/14.2
C466	4030017420	S.CER ECJ0EC1H470J	T	34.9/14.3
C467	4030017420	S.CER ECJ0EC1H470J	T	29.3/14.7
C468	4030017420	S.CER ECJ0EC1H470J	T	35.9/14.3
C473	4030016790	S.CER ECJ0EB1C103K	T	37.9/14.3
C474	4030017490	S.CER C1608 JB 1A 105K-T	T	5.7/23.1
C475	4030017460	S.CER ECJ0EB1E102K	T	8.9/55.3
C476	4030017460	S.CER ECJ0EB1E102K	T	10.1/47.6
C477	4030017460	S.CER ECJ0EB1E102K	T	12.7/36.4

M.=Mounted side (T: Mounted on the Top side, B: Mounted on the Bottom side)

S.=Surface mount

[FRONT UNIT]

REF NO.	ORDER NO.	DESCRIPTION	M.	H/V LOCATION
C478	4030017460	S.CER ECJ0EB1E102K	T	13.7/36.4
C479	4030017460	S.CER ECJ0EB1E102K	T	19.2/16.5
C481	4030017460	S.CER ECJ0EB1E102K	T	4.4/35.6
C482	4030017460	S.CER ECJ0EB1E102K	T	11.5/37.7
C483	4030017460	S.CER ECJ0EB1E102K	T	38.1/43.4
C484	4030017460	S.CER ECJ0EB1E102K	B	14.7/55.2
C485	4030017460	S.CER ECJ0EB1E102K	B	7.3/58
C486	4030017460	S.CER ECJ0EB1E102K	T	10.1/56.5
C487	4030017460	S.CER ECJ0EB1E102K	T	34.3/36.9
C488	4030017460	S.CER ECJ0EB1E102K	T	23.9/43.7
C489	4030017460	S.CER ECJ0EB1E102K	T	8.5/27.1
C490	4030017460	S.CER ECJ0EB1E102K	T	41.2/28.6
C491	4030017460	S.CER ECJ0EB1E102K	T	37.3/38.8
C492	4030017460	S.CER ECJ0EB1E102K	T	8/22
C493	4030016930	S.CER ECJ0EB1A104K	T	16.9/34.7
C494	4030017460	S.CER ECJ0EB1E102K	T	39.6/67.3
C495	4030017460	S.CER ECJ0EB1E102K	T	9.4/39.8
C496	4550007060	S.TAN ECSTIAX336R	T	14.5/54.8
C497	4030016790	S.CER ECJ0EB1C103K	T	5.4/41.5
C498	4030017430	S.CER ECJ0EC1H101J	T	7.8/37.6
C499	4030017420	S.CER ECJ0EC1H470J	T	17.6/39.7
C500	4030016930	S.CER ECJ0EB1A104K	B	4.1/39
J401	6510023520	S.CNR 54104-3692	T	27.8/6.8
J402	6510023830	S.CNR SM04B-SRSS-TB	T	34.9/52.5
DS401	5030002730	LCD L3-0048TAY-5		
DS402	5040002420	S.LED SML-310MT T86	B	13.5/16.1
DS403	5040002420	S.LED SML-310MT T86	B	32.7/15.3
DS404	5040002960	S.LED SML-A12MT T86	B	6.4/38
DS405	5040002960	S.LED SML-A12MT T86	B	42.6/38
DS406	5040002670	S.LED CL-165HR/YG	B	45.3/50.2
MC401	7700002480	MIC SKB-2746 LPC		
S401	2260002840	SW SKHLLFA010		
SP401	2510001092	SP 036D0801B <FG>		
W401	8900011880	CBL OPC-1210 (P=0.5 N=36 L=70)		
W402	7120000470	JMP ERDS2T0		
W403	7120000470	JMP ERDS2T0		

[CONNECTOR UNIT]

REF NO.	ORDER NO.	DESCRIPTION	M.	H/V LOCATION
D701	1790001810	S.VSR AVR-M1005C080MTABB	B	8/2.4
D702	1790001810	S.VSR AVR-M1005C080MTABB	B	8/3.4
D703	1790001810	S.VSR AVR-M1005C080MTABB	B	8/4.4
D704	1790001810	S.VSR AVR-M1005C080MTABB	T	9.6/6.1
D705	1790001810	S.VSR AVR-M1005C080MTABB	B	9.7/18.9
R701	7410001130	S.ARY EXB28V102JX	T	8/4.8
C701	4030017460	S.CER ECJ0EB1E102K	B	9.7/9.4
C702	4030017460	S.CER ECJ0EB1E102K	B	9.7/12.2
C703	4030017460	S.CER ECJ0EB1E102K	B	9.7/15.3
C704	4030017460	S.CER ECJ0EB1E102K	B	7.9/19.7
EP701	6910012350	S.BEA MMZ1608Y 102BT	B	8.2/8.6
EP702	6910012350	S.BEA MMZ1608Y 102BT	B	8.2/11.6
EP703	6910012350	S.BEA MMZ1608Y 102BT	B	8.2/14.6
EP704	6910012350	S.BEA MMZ1608Y 102BT	B	8.5/17.2
EP705	6910012350	S.BEA MMZ1608Y 102BT	B	9.8/17.2

[VR UNIT]

REF NO.	ORDER NO.	DESCRIPTION	M.	H/V LOCATION
R601	7210003130	VAR TP76N97N-13F-10KA-2497		
W601	8900012340	CBL OPC-1260		

[CHASSIS UNIT]

REF NO.	ORDER NO.	DESCRIPTION	M.	H/V LOCATION
J1	6910015630	CNR 2682 ANT CONNECTOR		

M.=Mounted side (T: Mounted on the Top side, B: Mounted on the Bottom side)

S.=Surface mount

SECTION 7 MECHANICAL PARTS AND DISASSEMBLY

7-1 CABINET PARTS

[MAIN UNIT]

REF. NO.	ORDER NO.	DESCRIPTION	QTY.
MP4	8510016150	2682 shield plate	1
MP11	8930066530	Rubber sheet (BP)	1

[CHASSIS PARTS]

REF. NO.	ORDER NO.	DESCRIPTION	QTY.
J1	6910015630	2682 antenna connector	1
W1	7120000470	ERDS2T0	1
MP1	8010019294	2681 chassis-4	1
MP2	8950005511	2403 contact spring -1	1
MP3	8930058561	2403 A-main seal-1	1
MP4	8930059800	2600 pet sheet	1
MP5	8930059830	2600 sheet	1
MP6	8930051500	O ring (AB)	1
MP7	8930055870	O ring (AO)	1
MP8	8930058550	O ring (AS)	1
MP9	8830001600	Screw nut (L)	1
MP10	8830001470	VR nut (N)	1
MP11	8850001880	Sealing washer (W)	2
MP12	8810009510	Screw B0 2 × 4 NI-ZU (BT)	7
MP13	8810007890	Screw B0 2 × 4 SUS	1
MP14	8810010121	Screw B0 2 × 8 SUS SSBC	2
MP15	8810010190	Screw M2 × 4 SUS ZK	3
MP19	8930068750	Shield tape (R)	1

[FRONT UNIT]

REF. NO.	ORDER NO.	DESCRIPTION	QTY.
DS401	5030002630	L3-0048TAY-2	1
EP402	8930061530	SRCN-2681-SP-N-W	2
SP401	2510001092	036D0801B	1
W401	8900011880	OPC-1210A	1
MP401	8210019860	2681 front panel	1
MP404	8930060540	2681 4-2 Key board	1
MP405	8210019880	2681 PTT button	1
MP406	8930060550	2681 PTT plate	1
MP407	8930060710	2681 PTT rubber	1
MP408	8310059540	2681 LCD plate	1
MP410	8210019890	2681 Reflector	1
MP411	8310059530	2681 window plate	1
MP412	8930060860	2681 window sheet	1
MP413	8930059360	2600 release button	1
MP414	8930055761	2403 release plate	1
MP415	8930056540	Spring (AH)	2
MP417	8930055730	2403 connector seal	1
MP418	8930055890	2403 connector sheet	1
MP419	8930056430	2403 9-pin sheet	1
MP421	8610011380	Knob N-313	1
MP423	8930061110	2681 mic tape	1
MP424	8810009510	Screw B0 2 x 4 NI-ZU (BT)	4
MP426	8930061200	2681 mic rubber	1
MP429	8930062240	Sponge (HM)	1

[VR UNIT]

REF. NO.	ORDER NO.	DESCRIPTION	QTY.
R601	7210003130	TP76N97N-13F-10KA-2497	1

[CONNECTOR UNIT]

REF. NO.	ORDER NO.	DESCRIPTION	QTY.
MP701	8950005520	2403 9-pin connector	1

Screw abbreviations B0, BT: Self-tapping
ZK: Black
SUS: Stainless
NI-ZU: Nickel-zinc

[ACCESSORIES]

REF. NO.	ORDER NO.	DESCRIPTION	QTY.
EP1	Optional Product	Battery BP-227AX	1
EP2	Optional Product	Antenna FA-S27U	1
MP1	Optional Product	Beltclip MB-98	1
MP2	8210017071	2337 C-Panel-1	1
MP3	8810009270	Screw M3 × 4 SUS SSBC	1
MP4	8310060530	2681 key-sticker	1

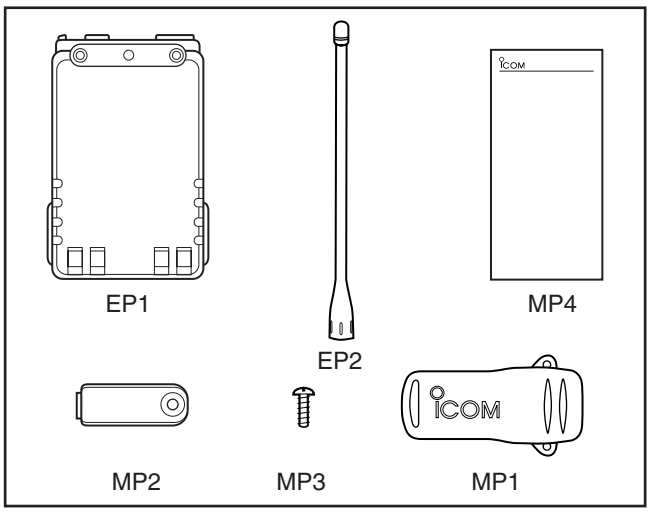

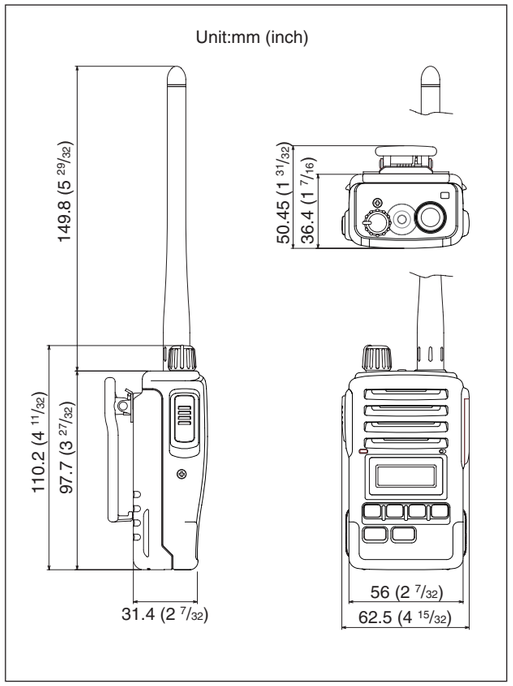

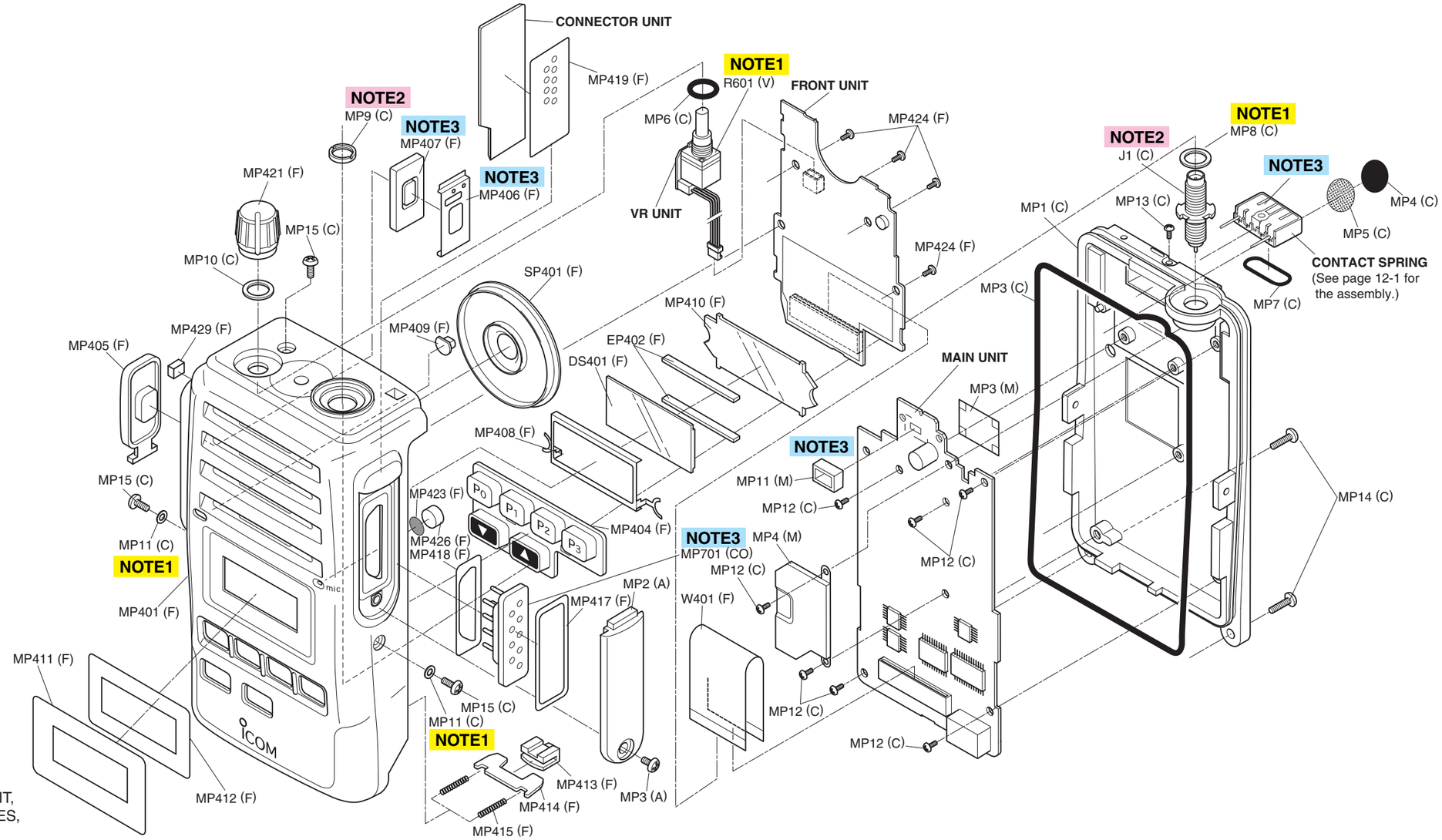

UNIT abbreviations (C): CHASSIS PARTS, (M): MAIN UNIT, (CO): CONNECTOR UNIT, (V): VR UNIT, (A): ACCESSORIES, (F): FRONT UNIT

NOTE1 : Once the following parts are removed, an O ring or sealing washer must be replaced with new one before reattachement.

REF. NO.	Mother parts	Daughter parts for relayted replacement
MP8 (C)	2600 ant connector (J1)	O ring
MP11 (C)	MP15 (C) Screw	Sealing washer (W)
MP6 (C)	S1 (C) Encoder	O ring (AB)

NOTE2

Apply a screw lock in the conclusion with J1 (C) and MP9 (C).
Reference No. : 89500001350
Reference Name : Screw lock 1401B

NOTE3 The glue must be applied to the areas when the front panel is replaced with new one, to ensure water tightness.

Manufacture : Cemedine Co.
Type : Super-X

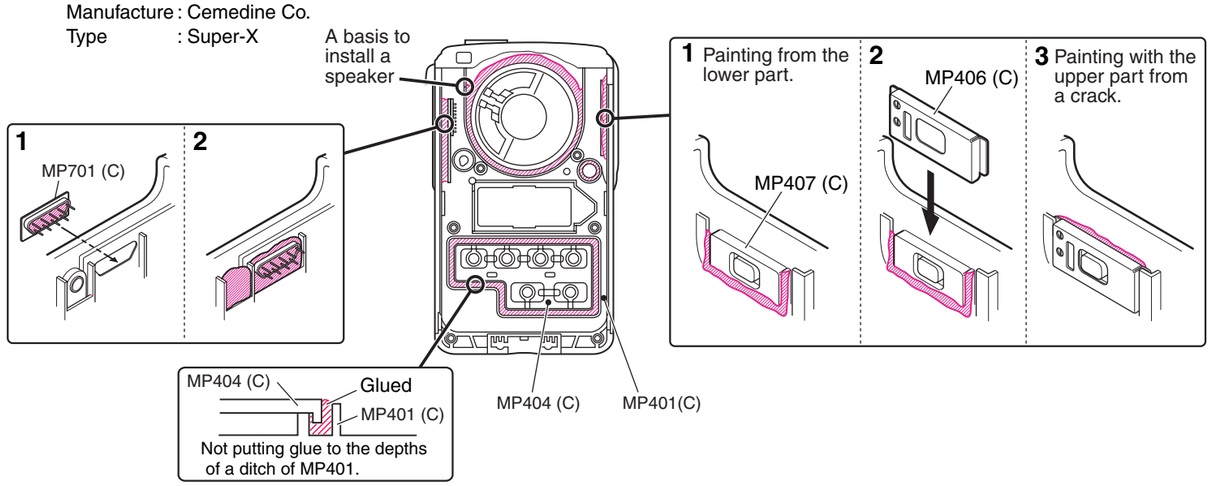

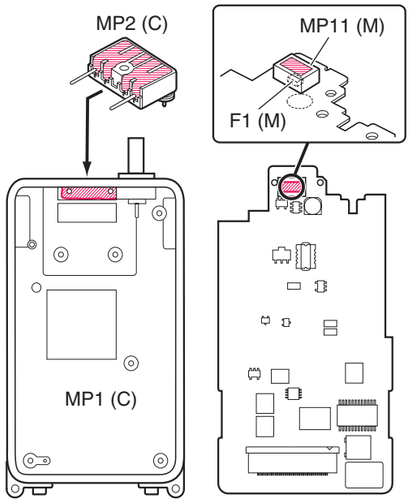

SECTION 8 SEMI-CONDUCTOR INFORMATION

• TRANSISTOR AND FET'S

2SA1577 Q (Symbol: HP) 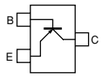	**2SB1132 Q** (Symbol: BAQ) 	**2SC4116 BL** (Symbol: LL) 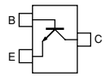	**2SC4116 Y** (Symbol: LY) 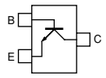	**2SC4215 O** (Symbol: QO) 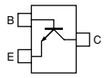
2SC4226 R25 (Symbol: R25) 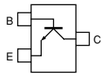	**2SC5107 O** (Symbol: MFO) 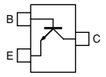	**2SC5110 O** (Symbol: MGO) 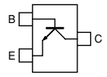	**2SK880 Y** (Symbol: XY) 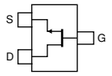	**2SK1829** (Symbol: K1) 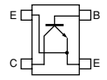
3SK293 (Symbol: UF) 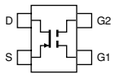	**3SK299** (Symbol: U73) 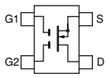	**DTA144 EU** (Symbol: 16) 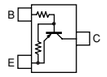	**DTC144EU** (Symbol: 26) 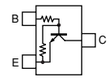	**RD01MUS1** (Symbol: K2) 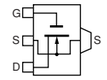
RD07MVS1 (Symbol: RD07MVS1) 	**RSR025N03** (Symbol: QY) 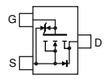	**TPC6103** (Symbol: S3C) 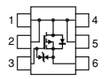	**XP1214** (Symbol: 9H) 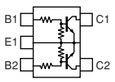	**XP4111** (Symbol: 9U) 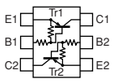
XP4312 (Symbol: 7T) 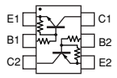	**XP6501 AB** (Symbol: 5N) 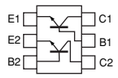			

• DIODES

1SV239 (Symbol: TC) 	**1SV307** (Symbol: TX) 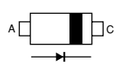	**HVC350B** (Symbol: B0) 	**HVC375B** (Symbol: B8) 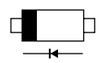	**HVC376B** (Symbol: B9)
MA2S077 (Symbol: S) 	**MA2S111** (Symbol: A) 	**MA2S728** (Symbol: B) 	**RB706F- 40** (Symbol: 3J) 	

SECTION 9 BOARD LAYOUTS

9-1 MAIN UNIT

- **TOP VIEW**

J1
to the FRONT unit J401

		38
	GND	
36	VCC	
	VCC	
	NC	
	+5V	
	S5V	
	GND	
	GND	
	PWON	
	CSFT	
	DAST	
	MROF	
	MDIA	
	UNLK	
	TEMP	
	RSSI	
	LVIN	
	KR1	
	CDEC	
	SDEC	
	NOIS	
	MTCK	
	MTOT	
	EXOE	
	EXSM	
	SCAT	
	PLST	
	SCST	
	MSCK	
	MDIO	
	SCK	
	SO	
	SIGNAL	
	CDCS	
	TONE	
	GND	
1	MIC	
	GND	
		37

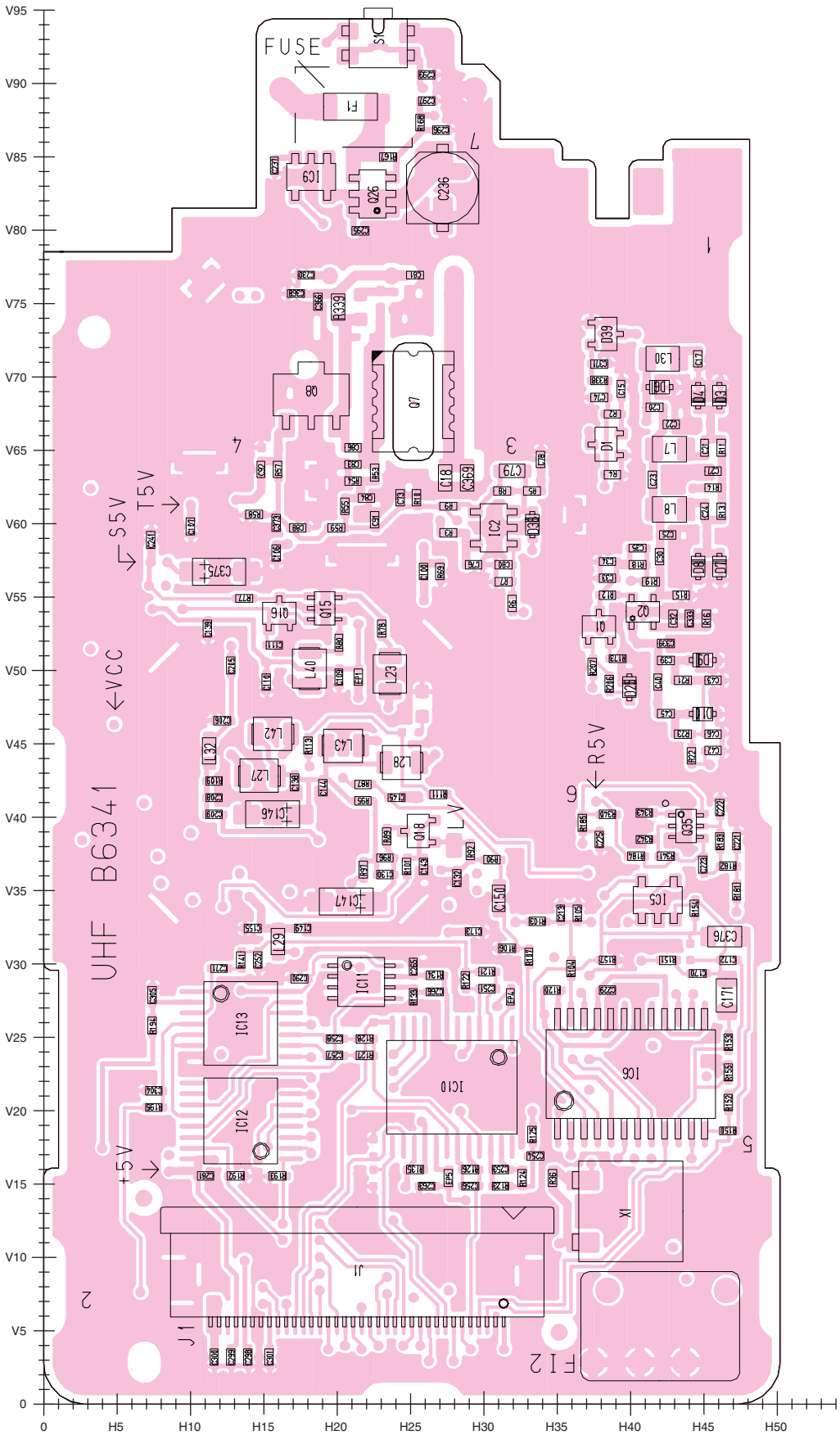

● **BOTTOM VIEW**

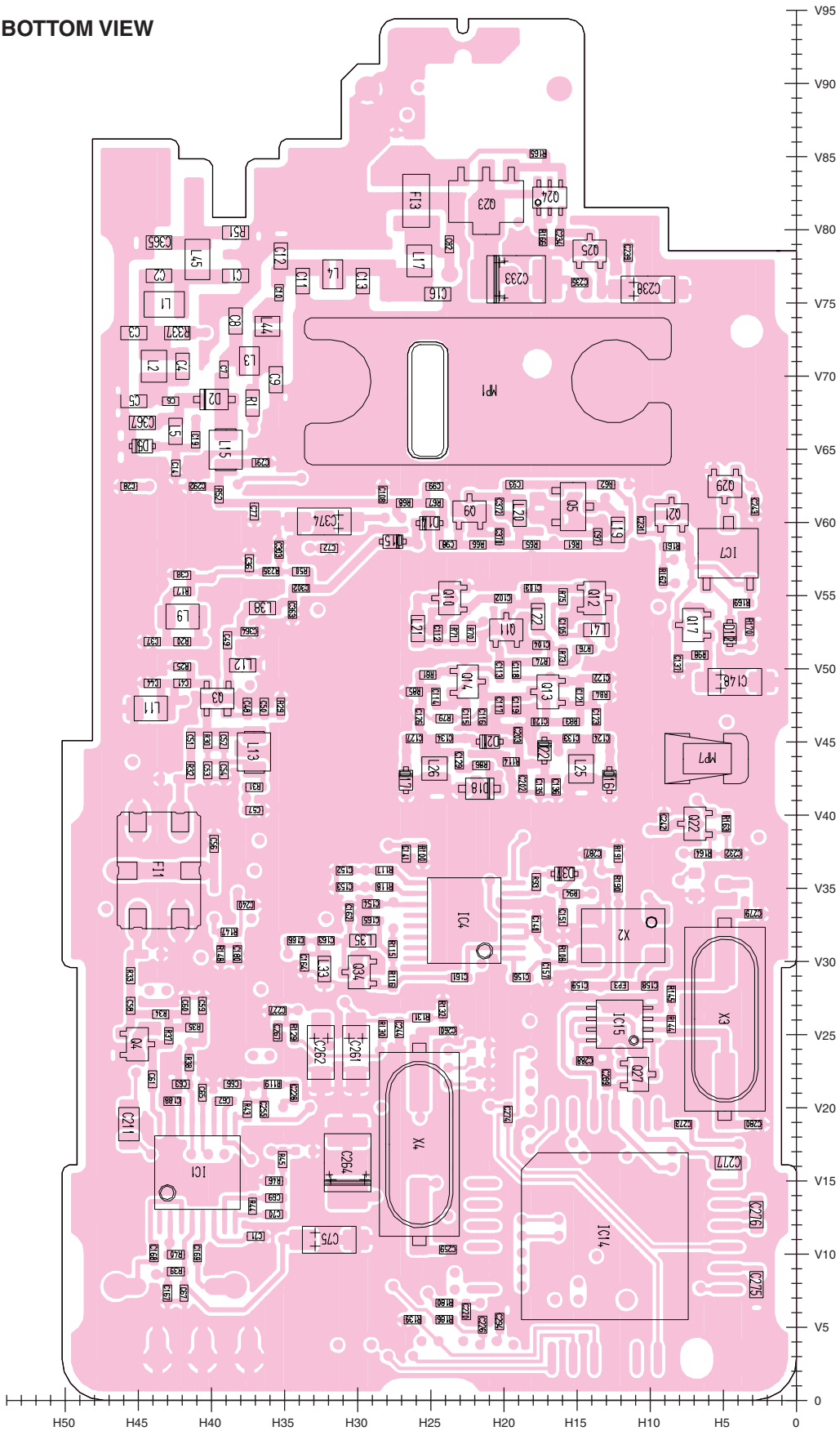
V95
V90
V85
V80
V75
V70
V65
V60
V55
V50
V45
V40
V35
V30
V25
V20
V15
V10
V5
0
H50
H45
H40
H35
H30
H25
H20
H15
H10
H5
0

9-2 FRONT UNIT

- **TOP VIEW**

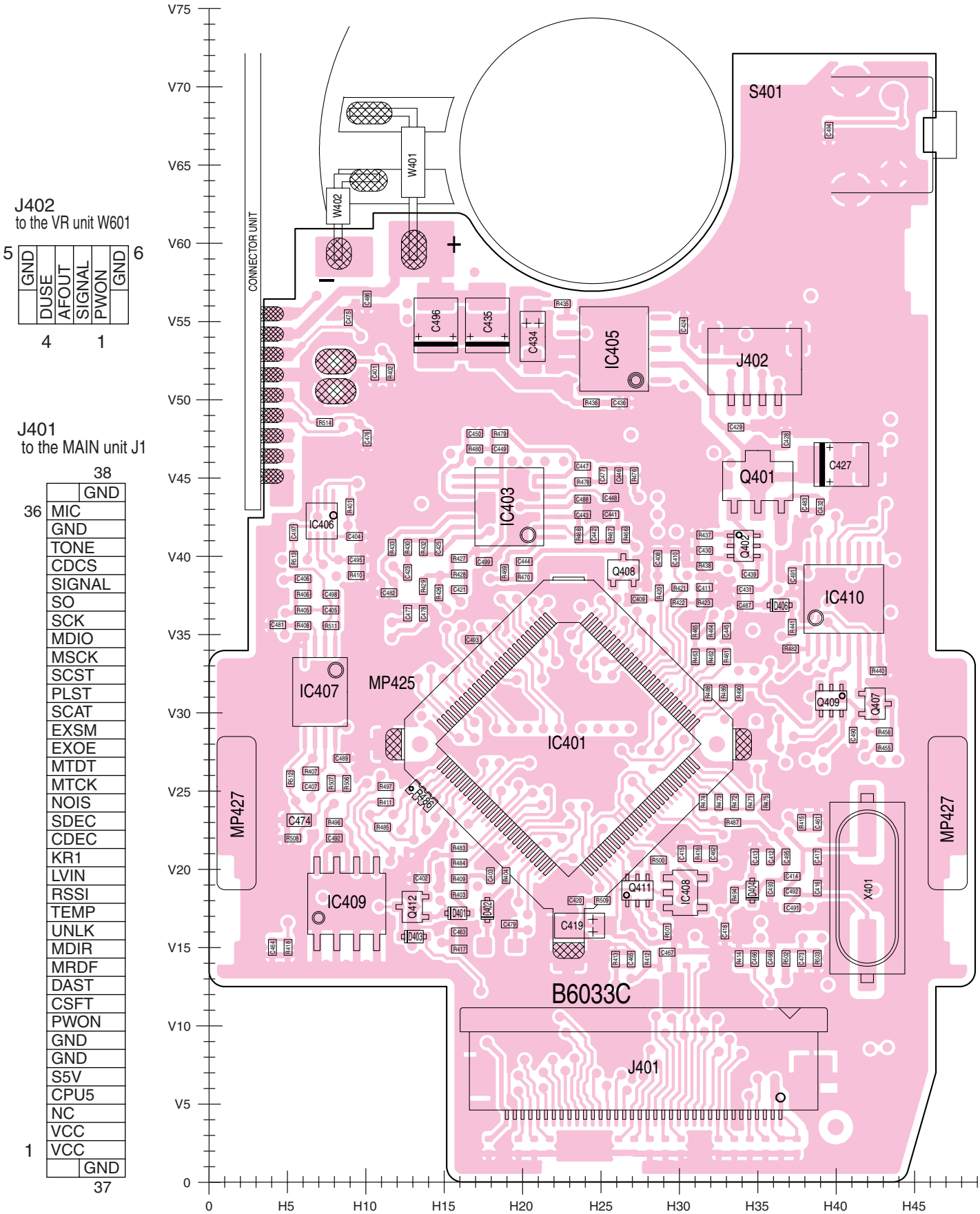

● **BOTTOM VIEW**

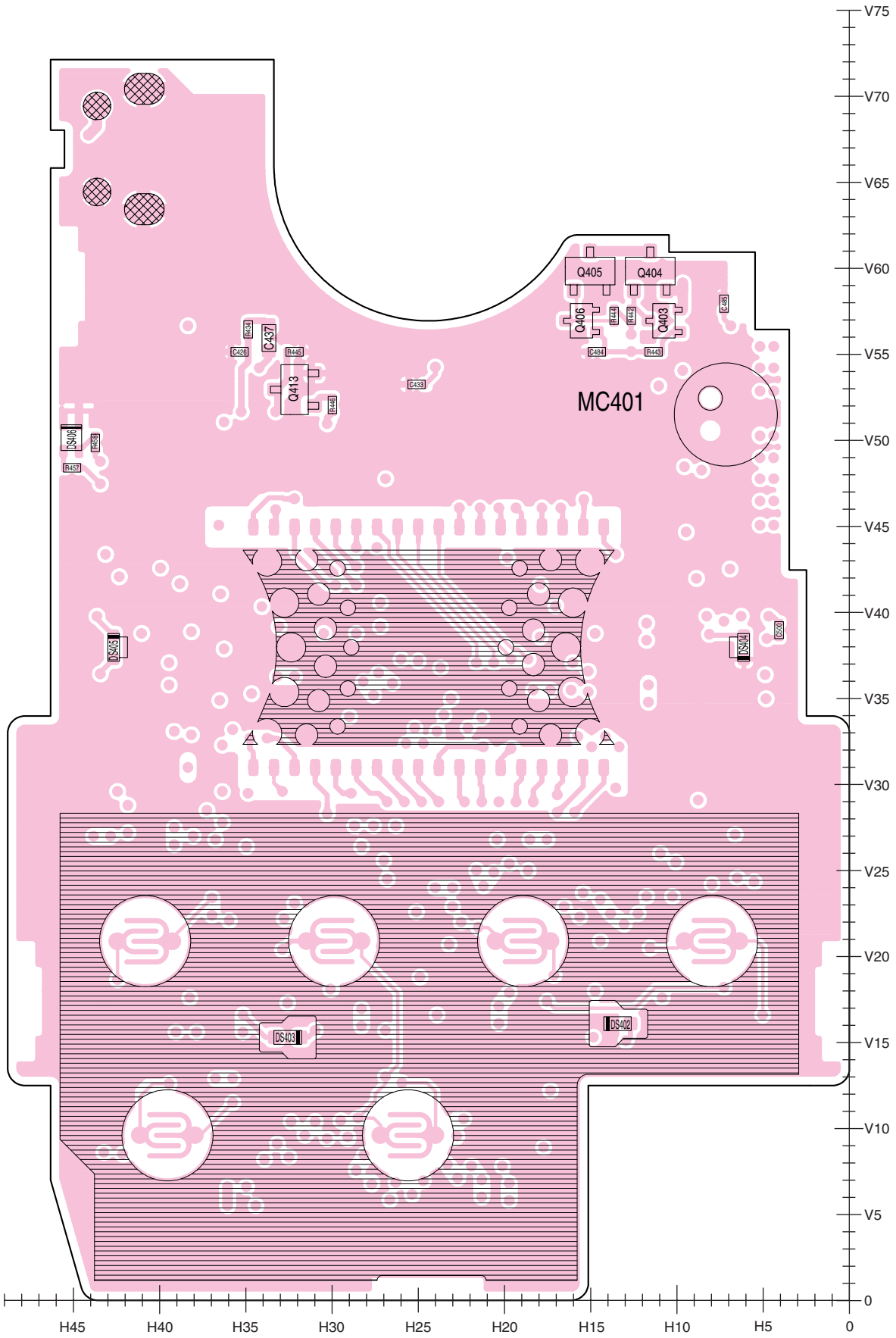
V75
V70
V65
V60
V55
V50
V45
V40
V35
V30
V25
V20
V15
V10
V5
0
H45
H40
H35
H30
H25
H20
H15
H10
H5
0
Q405
Q404
Q406
Q403
Q413
C437
C426
R445
R434
C433
R448
C484
R443
R444
R442
C485
MC401
DS406
R458
R457
DS405
DS404
C500
DS403
DS402

9-3 VR UNIT

- **TOP VIEW**

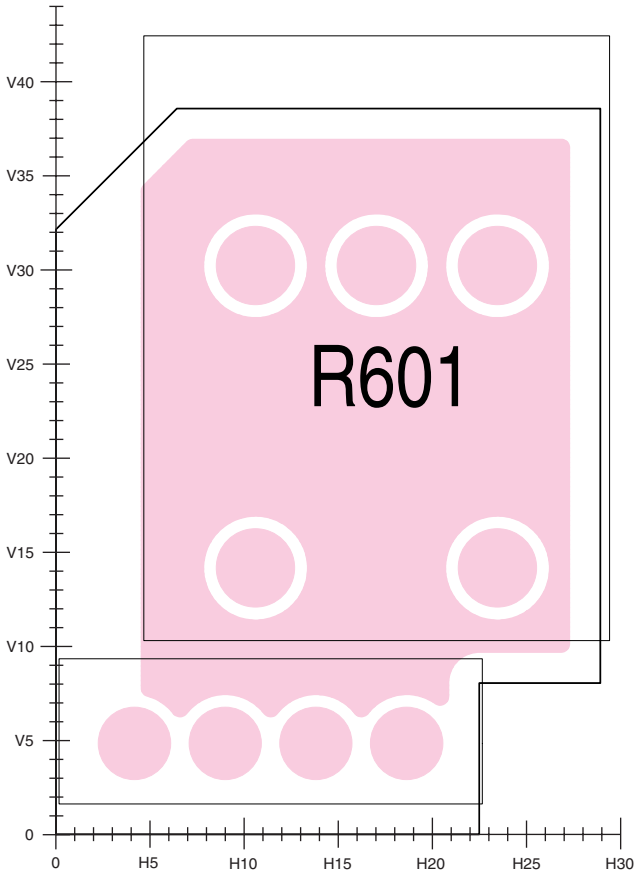

- **BOTTOM VIEW**

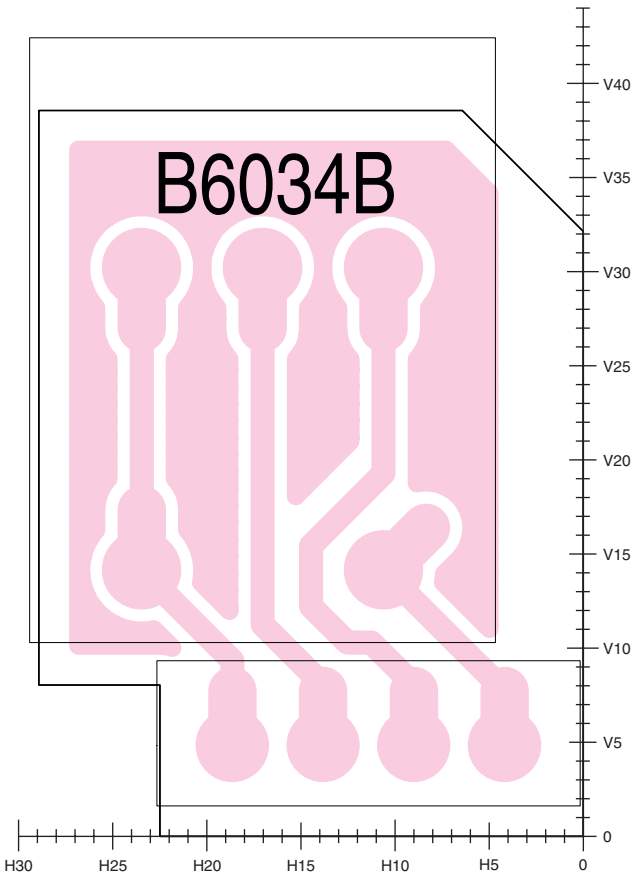

W601
to the FRONT UNIT J402

DUSE	AFOUT	AFON	PWON

4 1

9-4 CONNECTOR UNIT

- **TOP VIEW**

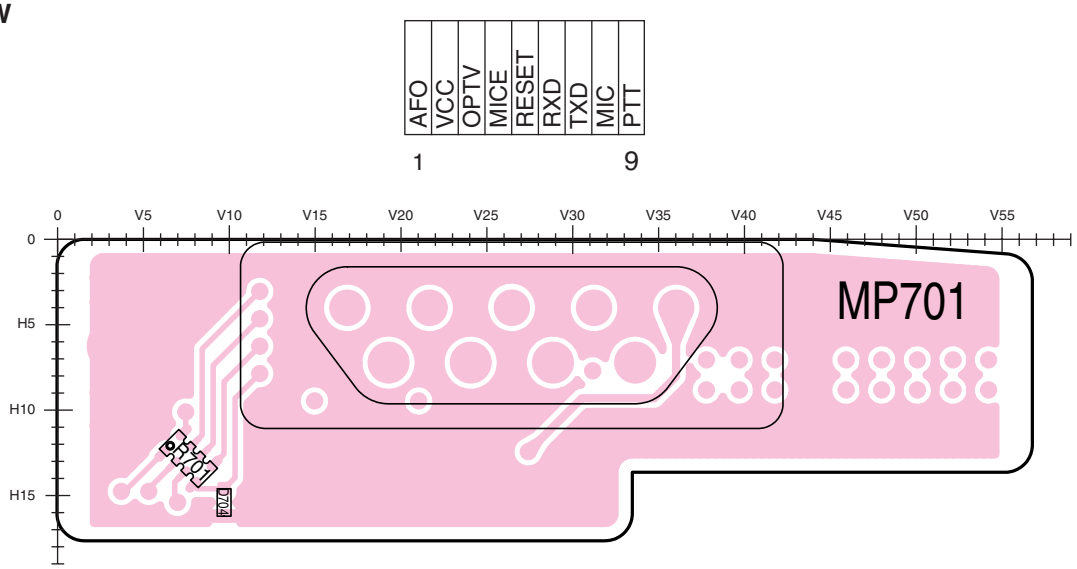

- **BOTTOM VIEW**

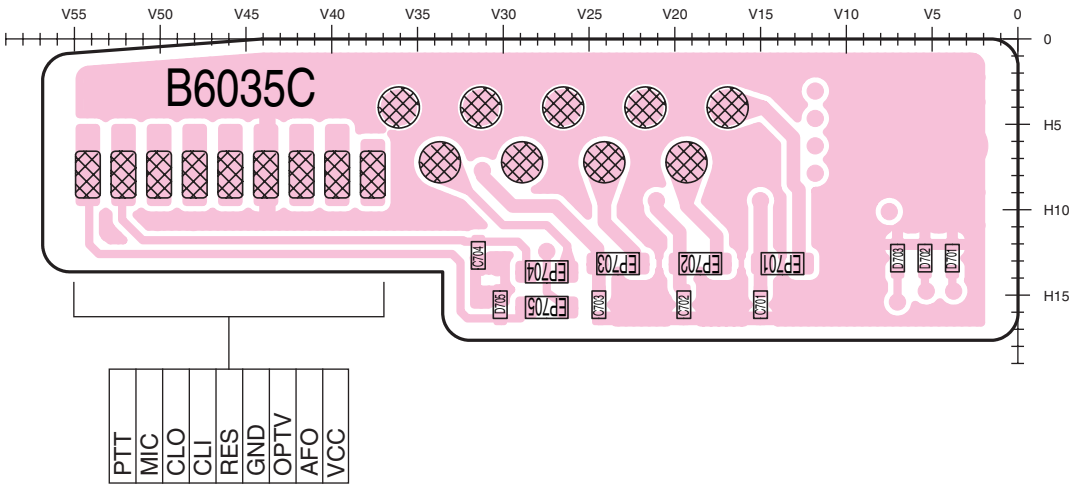

SECTION 10 BLOCK DIAGRAM

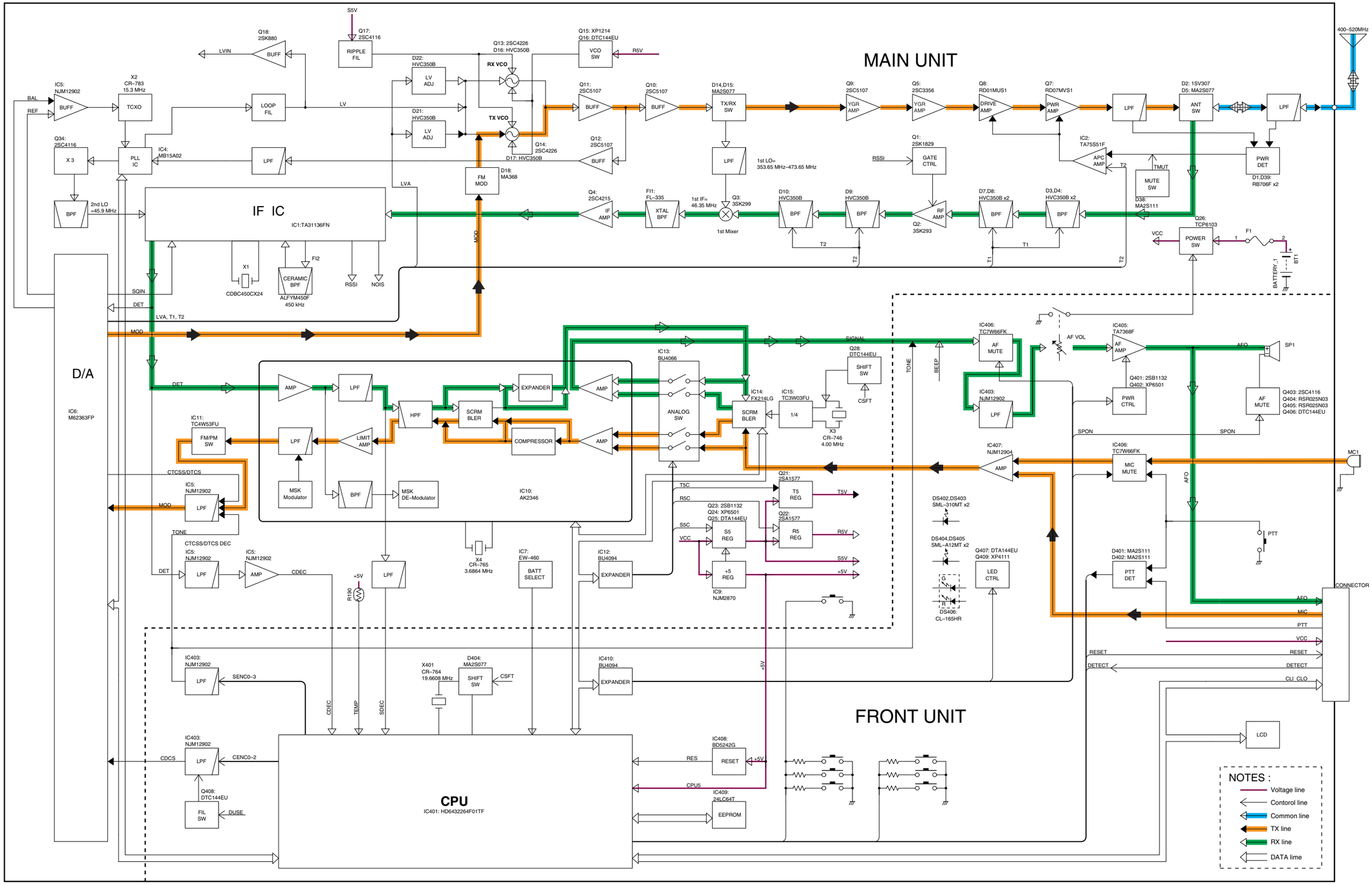

11-1 MAIN UNIT

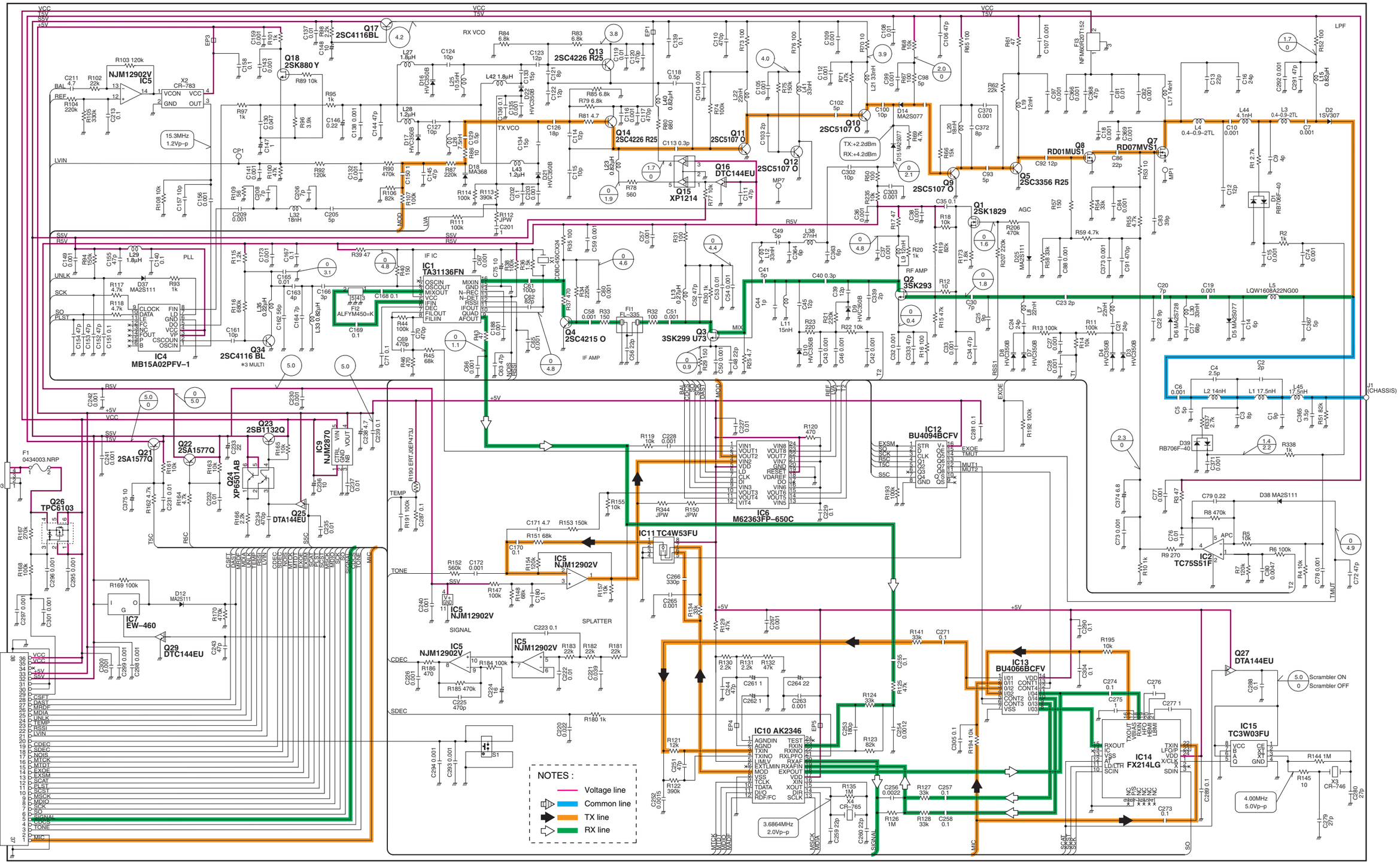

11-2 FRONT UNIT

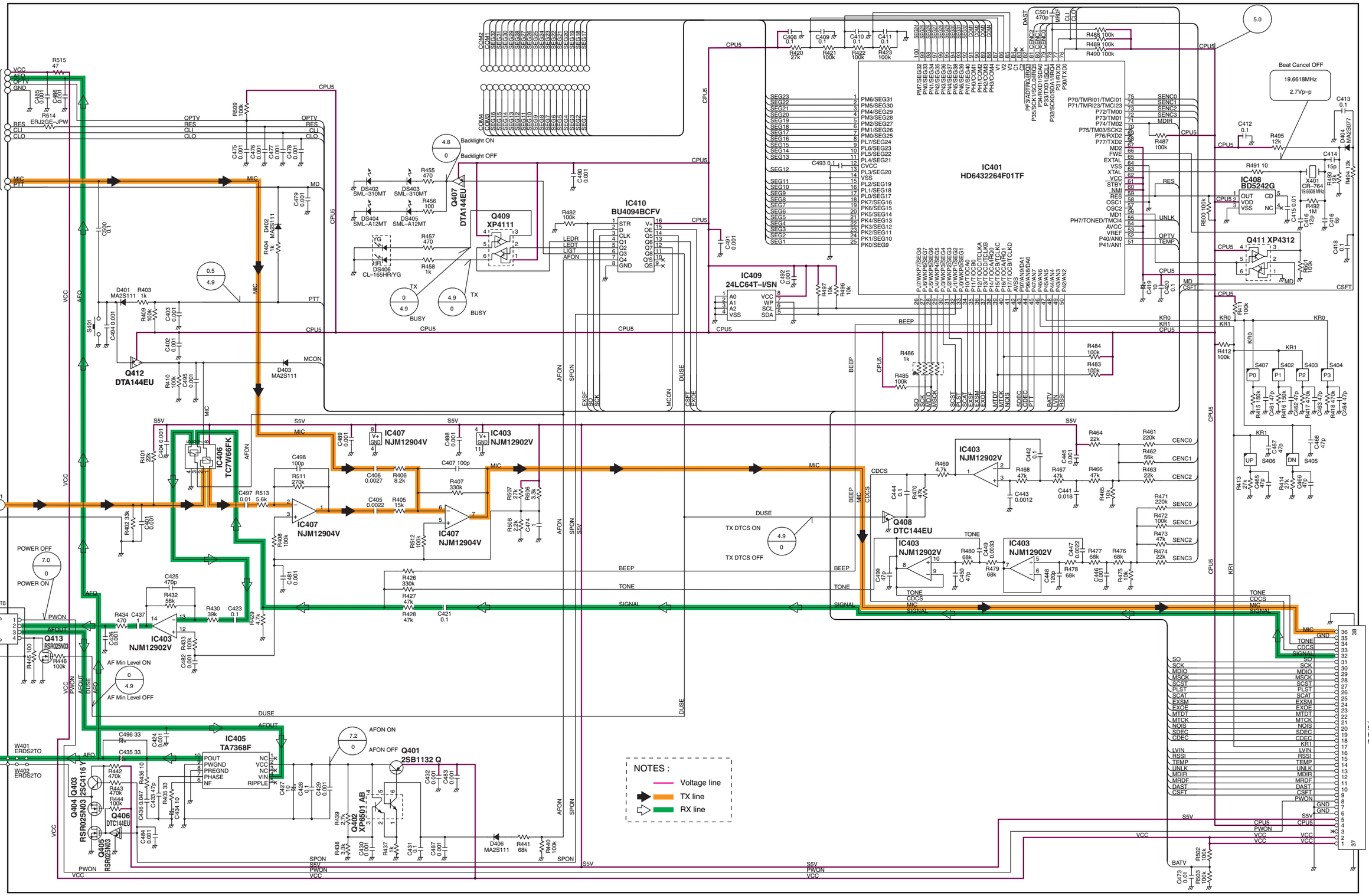

11-3 VR UNIT / CONNECTOR UNIT

VR UNIT

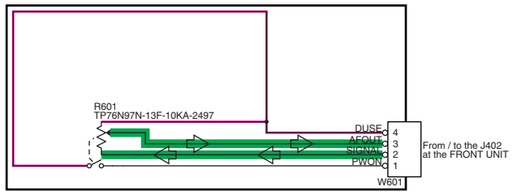

CONNECTOR UNIT

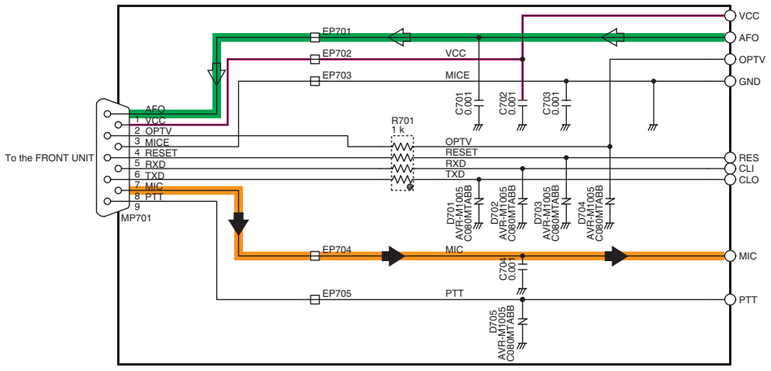

NOTES :

- Voltage line
- TX line
- RX line

SECTION 12 CONTACT SPRING ASSEMBLY INSTRUCTION

[1] PREPARING TWO SHORT LEADS

① Cut the W1 (CHASSIS).

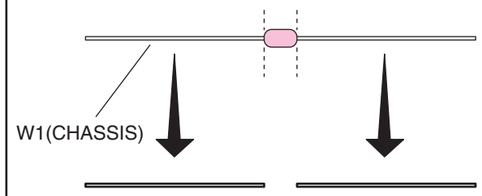

② Bend the leads according to the dimensions below.

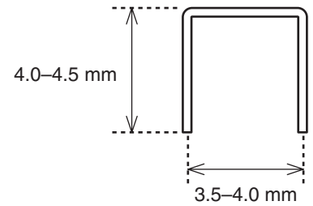

[2] SOLDERING SHORT LEADS

① Cut off the ▧ area as below.

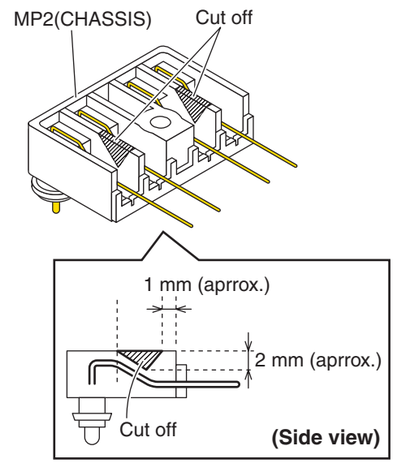

② Solder the short leads.

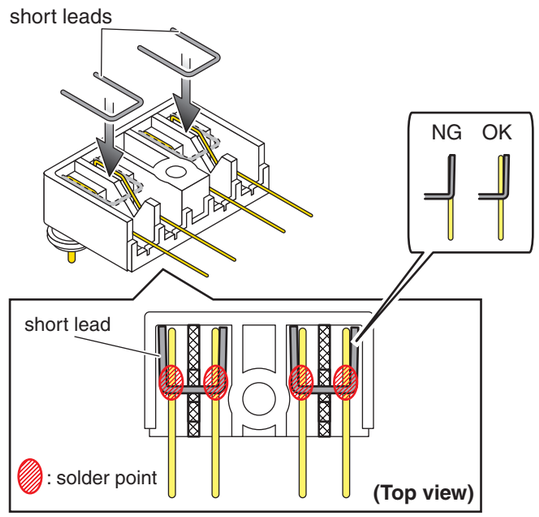

[3] ADDING THE GLUE AND CUTTING OFF EXTRA LEADS

① Fill up the MP2 with glue completely.

CAUTION DO NOT apply the glue to the area except ▧.
DO NOT overflow the glue.

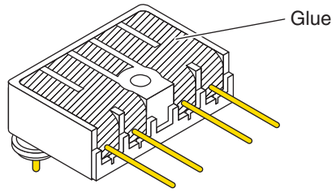

- Glue Type-
Manufacture: Cemedine Co.
Type: Super-X

② Cut off two inner leads from the bottom.

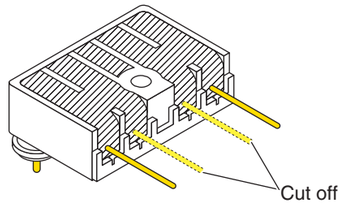

Icom Inc.

1-1-32, Kamiminami, Hirano-ku, Osaka 547-0003, Japan
Phone : +81 (06) 6793 5302
Fax : +81 (06) 6793 0013
URL : http://www.icom.co.jp/world/index.html

Icom America Inc.

<Corporate Headquarters>
2380 116th Avenue N.E., Bellevue, WA 98004, U.S.A.
Phone : +1 (425) 454-8155 Fax : +1 (425) 454-1509
URL : http://www.icomamerica.com
E-mail : sales@icomamerica.com
<Customer Service>
Phone : +1 (425) 454-7619

Icom Canada

Glenwood Centre #150-6165
Highway 17 Delta, B.C., V4K 5B8, Canada
Phone : +1 (604) 952-4266 Fax : +1 (604) 952-0090
URL : http://www.icomcanada.com
E-mail : info@icomcanada.com

Icom (Australia) Pty. Ltd.

Unit 1 / 103 Garden Road, Clayton VIC 3168 Australia
Phone : +61 (03) 9549-7500 Fax : +61 (03) 9549-7505
URL : http://www.icom.net.au
E-mail : sales@icom.net.au

Icom New Zealand

146A Harris Road, East Tamaki,
Auckland, New Zealand
Phone : +64 (09) 274 4062 Fax : +64 (09) 274 4708
URL : http://www.icom.co.nz
E-mail : inquiries@icom.co.nz

Beijing Icom Ltd.

10C07, Long silver Mansion, No.88, Yong Ding
Road, Haidian District, Beijing, 100039, China
Phone : +86 (010) 5889 5391/5392/5393
Fax : +86 (010) 5889 5395
E-mail : bjicom@bjicom.com
URL : http://www.bjicom.com

Icom (Europe) GmbH

Communication Equipment
Auf der Krautweide 24
65812 Bad Soden am Taunus, Germany
Phone : +49 (6196) 76685-0 Fax : +49 (6196) 76685-50
URL : http://www.icomeurope.com
E-mail : info@icomeurope.com

Icom Spain S.L

Ctra. Rubi, No. 88 Bajos A 08174, Sant Cugat del Valles, Barcelona, Spain
Phone : +34 (93) 590 26 70 Fax : +34 (93) 589 04 46
URL : http://www.icomspain.com
E-mail : icom@icomspain.com

Icom (UK) Ltd.

Blacksole House, The Boulevard, Altira Business Park, Herne Bay, CT6 6GZ, UK
Phone : +44 (01227) 741741 Fax : +44 (01227) 741742
URL : http://www.icomuk.co.uk
E-mail : info@icomuk.co.uk

Icom France s.a.s.

Zac de la Plaine
1 Rue Brindejonc des Moulinais BP 5804
31505 Toulouse Cedex, France
Phone : +33 (5) 61 36 03 03 Fax : +33 (5) 61 36 03 00
URL : http://www.icom-france.com
E-mail : icom@icom-france.com

Asia Icom Inc.

6F No.68, Sec. 1 Cheng-Teh Road, Taipei, Taiwan, R.O.C.
Phone : +886 (02) 2559 1899 Fax : +886 (02) 2559 1874
URL : http://www.asia-icom.com
E-mail : sales@asia-icom.com

Icom Polska

81-850 Sopot, ul. 3 Maja 54, Poland
Phone : +48 (58) 550 7135 Fax : +48 (58) 551 0484
E-mail : icompolska@icompolska.com.pl

Count on us!

Icom Inc.
1-1-32, Kamiminami, Hirano-ku, Osaka, 547-0003, Japan

S-14219MZ-C1
© 2006 Icom Inc.